Product Data Sheet

GW76975

GW FIT Range

Systems of accessories for electrical installations used for residential, tertiary and industrial applications. The system consists of fasteners for pipes and cables, cable fittings, accessories for rigid pipes (RK Series) and flexible conduit (DF Series). The system include also a wide variety of cable ties (52FS Range) and terminal blocks (44 Range).

IP degree	IP65	Material	Nickel-plated brass
Type of pitch	M20	Operating temperature	-30 +100 °C
Electrocod	3651		

DIMENSIONAL

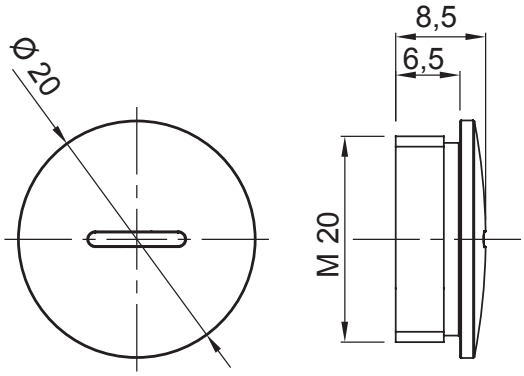

TECHNICAL SYMBOLOGY

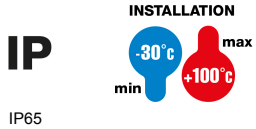

IP65

GEWISS S.p.A. Via Domenico Bosatelli 1
24069 Cenate Sotto - Bergamo - Italy
tel. +39 035 94 61 11 fax +39 035 94 69 09

www.gewiss.com
sat@gewiss.com
Last update 27/04/2024

Data, measures, designs and pictures are shown only as informative purposes, and could be changed without previous notice