Product Data Sheet

DX43316

GW FIT Range

Routing components for rigid protective conduits with IP40 and IP67 protection degree.

Colour	Grey RAL 7035	IP degree	IP65
Conduits Ø (mm)	16	Sheath Ø (mm)	12
Type of material	Halogen-free in compliance with EN 60754-2	Electrocod	21221

DIMENSIONAL

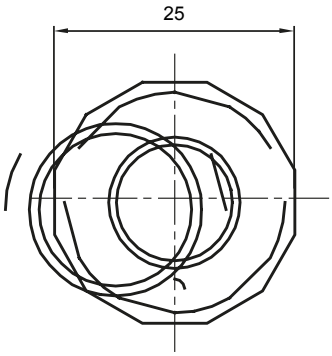

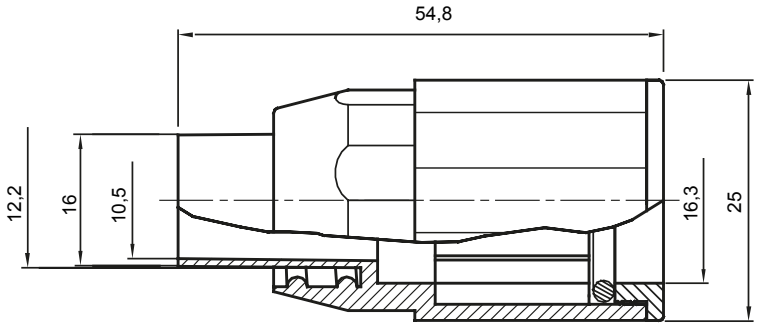

TECHNICAL SYMBOLOGY

IP

IP65

HF HALOGEN FREE

STANDARDS/APPROVALS

CE

GEWISS S.p.A. Via Domenico Bosatelli 1
24069 Cenate Sotto - Bergamo - Italy
tel. +39 035 94 61 11 fax +39 035 94 69 09

www.gewiss.com
sat@gewiss.com
Last update 25/04/2024

Data, measures, designs and pictures are shown only as informative purposes, and could be changed without previous notice