Product Data Sheet

GW46448

QDX 630 H range

Accessories and complementary items for distribution and automation boards range 46.

IP degree	IP44	Rated voltage	230 V - 50 / 60 Hz
Screws centre distance (mm)	123x115	Fixing hole (mm)	125x117
Description	Ventilation kit	Series	CVX630K / CVX630M / CVX1600 / 38LAN
Frequency	50/60 Hz	Suitable for	46QP - 46QM - 46QX
Voltage	230V ac	Electrocod	0303

DIMENSIONAL

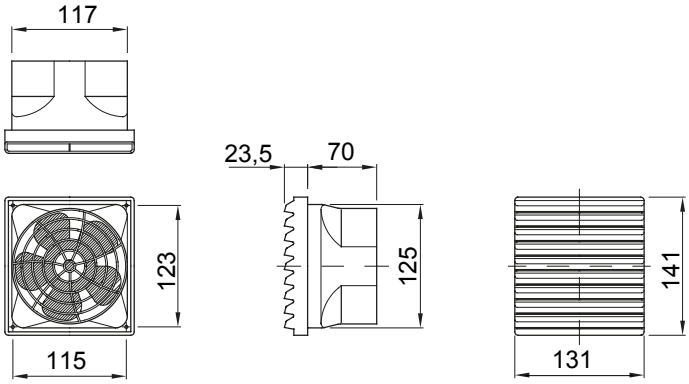

TECHNICAL SYMBOLOGY

IP

IP44

STANDARDS/APPROVALS

CE

GEWISS S.p.A. Via Domenico Bosatelli 1
24069 Cenate Sotto - Bergamo - Italy
tel. +39 035 94 61 11 fax +39 035 94 69 09

www.gewiss.com
sat@gewiss.com
Last update 24/04/2024

Data, measures, designs and pictures are shown only as informative purposes, and could be changed without previous notice