Product Data Sheet

GW94448

90 RCD Range

Description	RESIDUAL CURRENT DEVICE
Code	BD
No. of poles	3P
No. modules	3.5
Rated current	63 A
Rated residual operating current	30 mA
Type	AC
Rated voltage (IEC/EN 61009-1 app. G, IEC/EN 61009-2-1 app. G)	400 V

Standard	IEC/EN 61009-1 app. G, IEC/EN 61009-2-1 app. G	Rated frequency (Hz)	50/60 Hz
Insulation voltage (Ui)	500 V	Rated impulse withstand voltage (Uimp)	4 kV
Overvoltage category	III	Level of immunity (8/20 µs)	250 A
Section rigid cable	Max 35 mm²	Section flexible cable	Max 35 mm²
Operating temperature	-25 +40 °C	Stocking temperature	-40 +70 °C
Rated tightening torque	2 Nm	Assembly position	Any

DIMENSIONAL

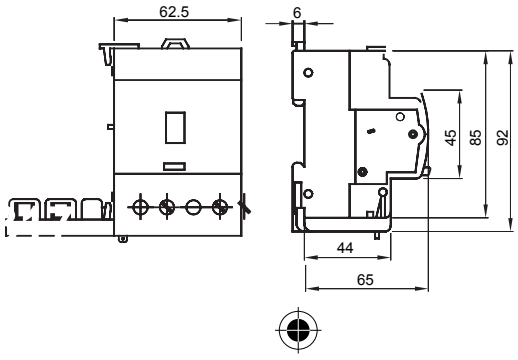

WIRING DIAGRAM

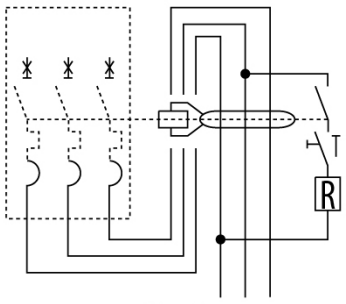

STANDARDS/APPROVALS

GEWISS S.p.A. Via Domenico Bosatelli 1
24069 Cenate Sotto - Bergamo - Italy
tel. +39 035 94 61 11 fax +39 035 94 69 09

www.gewiss.com
sat@gewiss.com
Last update 19/04/2024

Data, measures, designs and pictures are shown only as informative purposes, and could be changed without previous notice