Product Data Sheet

GW50829

GW FIT Range

Systems of accessories for electrical installations used for residential, tertiary and industrial applications. The system consists of fasteners for pipes and cables, cable fittings, accessories for rigid pipes (RK Series) and flexible conduit (DF Series). The system include also a wide variety of cable ties (52FS Range) and terminal blocks (44 Range).

Material	Galvanised steel	Internal Ø (mm)	38-40
Hole dimension (mm)	10x6	Description	U-Bolt
For external conduits (mm)	38-40	Type	With two holes
Electrocod	21211		

DIMENSIONAL

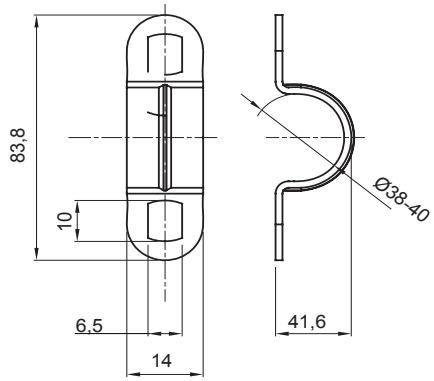

GEWISS S.p.A. Via Domenico Bosatelli 1
24069 Cenate Sotto - Bergamo - Italy
tel. +39 035 94 61 11 fax +39 035 94 69 09

www.gewiss.com
sat@gewiss.com
Last update 25/04/2024

Data, measures, designs and pictures are shown only as informative purposes, and could be changed without previous notice