Product Data Sheet

GWD9167

MSX



Description	Interruttore automatico scatolato
Code	MSX 160
No. of poles	3P+N
Rated current	160 A
Release	Electromechanic

ELECTRICAL CHARACTERISTICS	-	**MECHANICAL CHARACTERISTICS**	-
Standard	IEC/EN 60947-2	Execution	Fixed - Plug-in
Use category	A	DIN rail mounting	Yes, by means of accessory
Rated frequency (Hz)	50 / 60	Can be equipped with motor operator	Yes
Rated operating voltage (Ue)	690 V ac - 250 V dc	Compatible interlock	Lever – Cable
Rated impulse withstand voltage (Uimp)	8 kV	Terminals supplied	Front FC
Overvoltage category	IV	Assembly position	Any
Insulation voltage (Ui)	800 V	Upline/downline power supply	Yes
Thermal regulation	0.63 - 0.8 - 1 x In	Electrical life (415Vac)	20.000 cycles
Magnetic regulation	6 - 8 - 10 - 13 x In	Mechanical life	30.000 cycles
Neutral protection	Not protected	Operating temperature	-5°C +65°C
Total power loss	48.12 W	Stocking temperature	-20° +65°
Rated short-circuit current making capacity (Icm)	-	Weight (kg)	1.9
Rated short-time withstand current for 0,3s (Icw)	-	Width	140 mm
Idn regulation	-	Height	165 mm
DT regulation	-	Depth	68 mm
SERVICE BREAKING CAPACITY (ICU)	-	**RATED BREAKING CAPACITIY (ICS)**	-
220/240Vac	85 kA	220/240Vac	85 kA
400/415Vac	65 kA	400/415Vac	36 kA
440Vac	50 kA	440Vac	25 kA
525Vac	25 kA	525Vac	25 kA
690Vac	7.5 kA	690Vac	7.5 kA
250Vdc	40 kA	250Vdc	40 kA

DIMENSIONAL

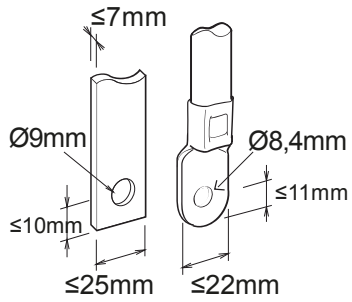

GEWISS S.p.A. Via A. Volta, 1
24069 Cenate Sotto - Bergamo - Italy
tel. +39 035 94 61 11 fax +39 035 94 69 09
Company subject to the management and coordination of Polifin S.p.A.

www.gewiss.com
sat@gewiss.com
Last update 29/11/2026

Data, measures, designs and pictures are shown only as informative purposes, and could be changed without previous notice

Product Data Sheet

GWD9167

MSX

STANDARDS/APPROVALS