Product Data Sheet
GWD4025
90 RCD Range



Description	RESIDUAL CURRENT CIRCUIT BREAKER
Code	IDP
No. of poles	2P
No. modules	2
Rated current	40 A
Rated residual operating current	500 mA
Type	AC
Rated voltage (EN/IEC 61008-1, 61008-2-1)	230/240 V

Standard	IEC/EN 61008-1, IEC/EN 61008-2-1	Rated frequency (Hz)	50/60 Hz
Insulation voltage (Ui)	500 V	Rated impulse withstand voltage (Uimp)	4 kV
Overvoltage category	III	Level of immunity (8/20 µs)	250 A
Section rigid cable	<=1x35 - <=2x16 - <=1x16+2x10 mm²	Section flexible cable	<=1x35 - <=2x16 - <=1x16+2x10 mm²
Rated tightening torque	3 Nm	Double connection	YES (up stream and down stram)
Operating temperature	-25 +60°C (40°C with derating)	Stocking temperature	-40°C ÷ +70°C
Electrical endurance	≥ 10.000	Mechanical endurance	≥ 20000
Auxiliaries compatibility	Yes	ReStart compatibility	Yes
Assembly position	Any		

DIMENSIONAL

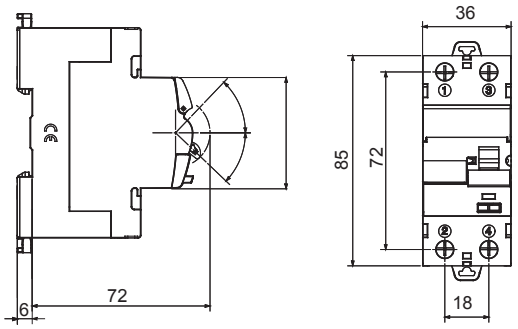

WIRING DIAGRAM

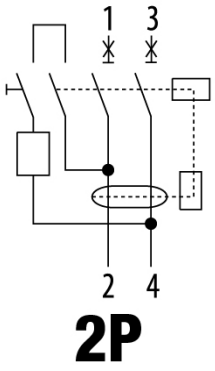

STANDARDS/APPROVALS

GEWISS S.p.A. Via A. Volta, 1
24069 Cenate Sotto - Bergamo - Italy
tel. +39 035 94 61 11 fax +39 035 94 69 09
Company subject to the management and coordination of Polifin S.p.A.

www.gewiss.com
sat@gewiss.com
Last update 24/11/2026

Data, measures, designs and pictures are shown only as informative purposes, and could be changed without previous notice