Product Data Sheet

GWD2272

90 MCB Range

Description	MINIATURE CIRCUIT BREAKER
Code	MT 6
No. of poles	3P
No. modules	3
Rated current	50 A
Curve	B
Rated voltage	230-400 V

Standard	IEC EN 60898-1	Rated frequency (f)	50/60 Hz
Breaking capacity EN 60898 230V (Icn)	6000 A	Breaking capacity EN 60898 400V (Icn)	6000 A
Breaking capacity EN 60898 (Ics)	1 x Icn	Breaking capacity IEC/EN 60947-2 230V (Icu)	6 kA
Breaking capacity IEC/EN 60947-2 400V (Icu)	6 kA	Breaking capacity IEC/EN 60947-2 (Ics)	100% Icu
Insulation voltage (Ui)	500 V	Rated impulse withstand voltage (Uimp)	4 kV
Minimum operating voltage	12 V ac	Maximum operating voltage	440 V ac
Electrical endurance	8000	Mechanical endurance	20.000
Section rigid cable	<=1x25 - <=2x10 - <=1x16+1x10 mm²	Section flexible cable	<=1x35 - <=2x16 - <=1x16+2x10 mm²
Rated tightening torque	2 Nm	Operating temperature	-25 ÷ 70°C (With temperatures greater than 30°C, derating of In rated current is expected)
Stocking temperature	-40°C ÷ +70°C	Can be accessorized	No

DIMENSIONAL

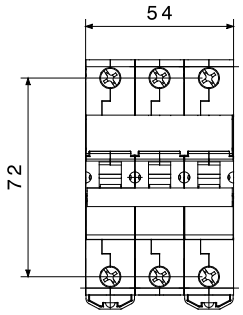

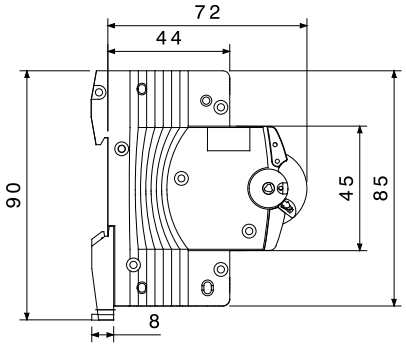

STANDARDS/APPROVALS

GEWISS S.p.A. Via A. Volta, 1
24069 Cenate Sotto - Bergamo - Italy
tel. +39 035 94 61 11 fax +39 035 94 69 09
Company subject to the management and coordination of Polifin S.p.A.

www.gewiss.com
sat@gewiss.com
Last update 22/10/2026

Data, measures, designs and pictures are shown only as informative purposes, and could be changed without previous notice