Product Data Sheet
GW68203N
68 ACS Range



Mobile, transportable terminal boards Type 68 Q-DIN are especially suitable for powering mobile tools and equipment. The accessories - including handles, floor-mounting supports and wheeled carriages - make it extremely easy to move the boards around the site. The 68 Q-DIN ACS boards are available in various configurations with interlocked or fixed IEC 309 socket-outlets in both the protected and watertight versions. Each board comes complete with cable and relative mobile plug for powering portable devices everywhere. The boards can also be equipped with safety locks with a metallic cylinder, and can be mounted on poles or walls, or on mobile floor-mounting supports.

Type	Q-DIN 10 ACS	board type	Wired
Outer dim. LxHxD (mm)	220x435x96	Weight (kg)	3
Accordance with Standards	EN 61439-4 (ACS)	Characteristics	UV resistance (EN 62208)
IP degree	IP44	Mechanical resistance	IK09
Glow wire test	650 °C	Thermo-pressure with ball	70 °C
Insulation class	II	Power supply	Mobile plug
No. of poles	2P+E	Power suppliable (kW)	3
Mains switch	RCBO 16 A 2P 6 kA 0.03 A - AC type	Circuits protection	RCBO
No. socket outlets	4	Socket-outlet 2P+E 16A - IEC 309	2
German Std socket-outlet 16 A	2	Cable length	4 m

BEHAVIOUR WITH CHEMICAL AND ATMOSPHERIC AGENTS

Saline solution	Acids		Bases		Solvents				Mineral oil	UV rays
	Concentrated	Diluited	Concentrated	Diluited	Hexane	Benzol	Acetone	Alcohol		
Resistant	Limited resistance	Resistant	Resistant	Resistant	Limited resistance	Not resistant	Not resistant	Limited resistance	Limited resistance	Limited resistance

DIMENSIONAL

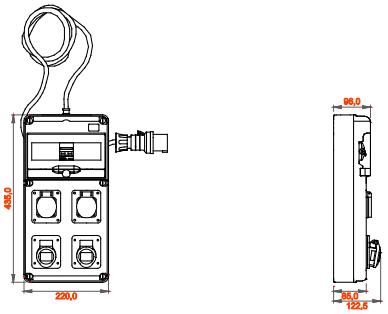

TECHNICAL SYMBOLOGY

EN 61439-4 (ACS)

UV resistance (EN 62208)

IP44

IK09

650 °C

70 °C

II

STANDARDS/APPROVALS

GEWISS S.p.A. Via A. Volta, 1
24069 Cenate Sotto - Bergamo - Italy
tel. +39 035 94 61 11 fax +39 035 94 69 09
Company subject to the management and coordination of Polifin S.p.A.

www.gewiss.com
sat@gewiss.com
Last update 23/11/2026

Data, measures, designs and pictures are shown only as informative purposes, and could be changed without previous notice