Product Data Sheet

GW66683N

IB Range

-

For walls	Brickwall	Glow Wire Test	650 °C
Houseable interloc. socket	1	IP degree	IP55
Mechanical resistance	IK08	Houseable IB socket-outlets	16/32 A SBF / CBF / Automatika
Electrocod	2222	Drilling bottom	Through multidiameter cutter
Minimum installation temperature	-15°C		

DIMENSIONAL

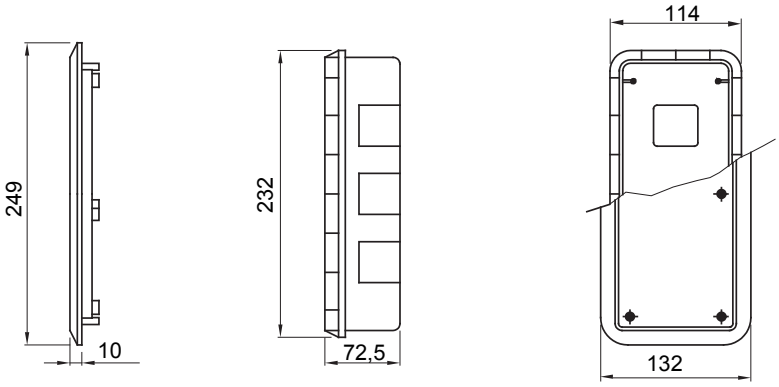

TECHNICAL SYMBOLOGY

GWT	IP	IK
650 °C	IP55	IK08

STANDARDS/APPROVALS

GEWISS S.p.A. Via A. Volta, 1
24069 Cenate Sotto - Bergamo - Italy
tel. +39 035 94 61 11 fax +39 035 94 69 09
Company subject to the management and coordination of Polifin S.p.A.

www.gewiss.com
sat@gewiss.com
Last update 06/05/2026

Data, measures, designs and pictures are shown only as informative purposes, and could be changed without previous notice