Product Data Sheet

GW66682PM

Green Wall range

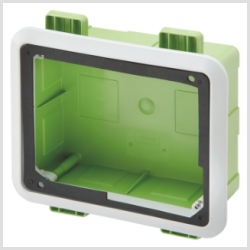

-

For walls	Plasterboard	For 44 IB socket-outlets	16/32 A CBF
Houseable interloc. socket	1	IP degree	IP44
Mechanical resistance	IK08	Houseable IB socket-outlets	16/32 A
For socket-outlets	CBF horizontal	Electrocod	2220
Glow wire test	850 °C (bottom) - 650 °C (frame)	Drilling bottom	Through multidiameter cutter
Minimum installation temperature	-15°C		

DIMENSIONAL

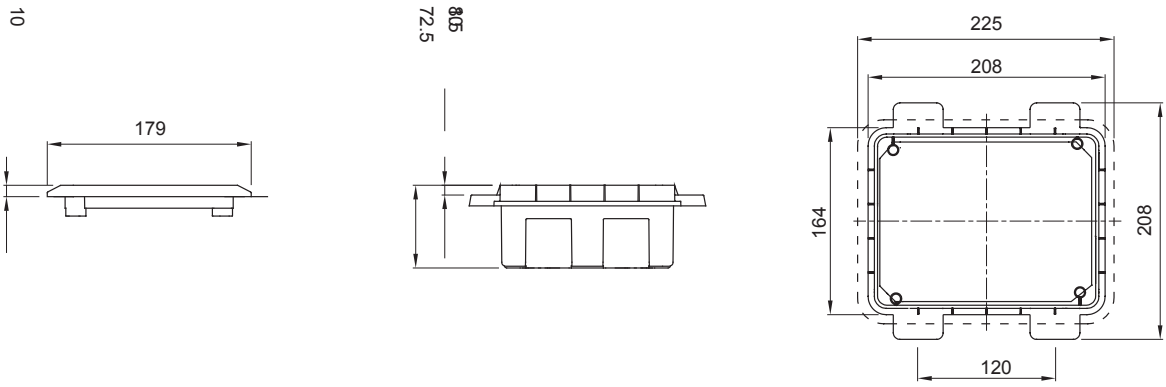

TECHNICAL SYMBOLOGY

IP	IK	GWT
IP44	IK08	850 °C (bottom) - 650 °C (frame)

STANDARDS/APPROVALS

GEWISS S.p.A. Via A. Volta, 1
24069 Cenate Sotto - Bergamo - Italy
tel. +39 035 94 61 11 fax +39 035 94 69 09
Company subject to the management and coordination of Polifin S.p.A.

www.gewiss.com
sat@gewiss.com

Last update 23/11/2026

Data, measures, designs and pictures are shown only as informative purposes, and could be changed without previous notice