Product Data Sheet
GW66592
IB Range



Range of industrial sockets-outlets with rated current equal to 125A in compilance with IEC 60309, with electrical interlock and with MCCB or MCCB equipped with residual current device. The casing of the sockets is made in high performance polyester reinforced with fibre-glass, resistent tu UV rays according to EN 62208, impact and abonormal heat and fire. The robustness of the products and their resistance allow the installation in heavy duty environments and with critical atmospheric.

Type	Vertical	Thermo-pressure with ball	200 °C
Impact resistance at -20 °C	20 J	IP degree	IP66
No. of poles	3P+N+E	Mechanical resistance	IK10
Frequency	50/60 Hz	Terminal tightening capacity	2.5-50 mm² flexible cables - 2.5-70 mm² rigid cables
Operating temperature	-25 +40 °C	Protection	MCB+ADD-ON RCD
Electrocod	2221	Glow wire test	850 °C (Socket) - 960 °C (Case)
Colour	Yellow	Circuit breaker	125 A 25 kA C characteristic 30-3000 mA
Rated current InA (A)	110	Reference h	4
Rated voltage	100 - 130 V	Type of use	Heavy duty

DIMENSIONAL

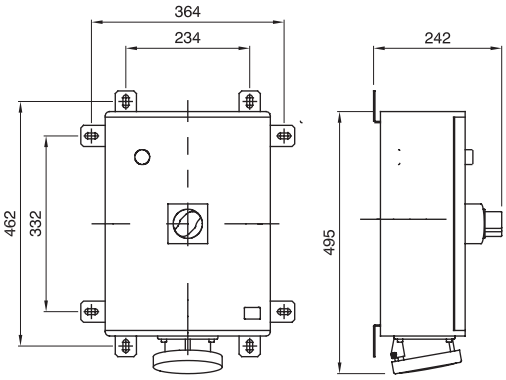

TECHNICAL SYMBOLOGY



200 °C

IP

IP66

IK

IK10

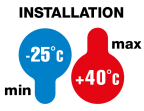

GWT

850 °C (Socket) - 960 °C (Case)

STANDARDS/APPROVALS



GEWISS S.p.A. Via A. Volta, 1
24069 Cenate Sotto - Bergamo - Italy
tel. +39 035 94 61 11 fax +39 035 94 69 09
Company subject to the management and coordination of Polifin S.p.A.

www.gewiss.com
sat@gewiss.com
Last update 25/11/2026

Data, measures, designs and pictures are shown only as informative purposes, and could be changed without previous notice