Product Data Sheet

GW66585

IB Range

Range of industrial sockets-outlets with rated current equal to 125A in compilance with IEC 60309, with electrical interlock and with MCCB or MCCB equipped with residual current device. The casing of the sockets is made in high performance polyester reinforced with fibre-glass, resistent tu UV rays according to EN 62208, impact and abonormal heat and fire. The robustness of the products and their resistance allow the installation in heavy duty environments and with critical atmospheric.

Type	Vertical	Thermo-pressure with ball	200 °C
Impact resistance at -20 °C	20 J	IP degree	IP66
No. of poles	3P+E	Mechanical resistance	IK10
Frequency	50/60 Hz	Terminal tightening capacity	2,5-50 mm² flexible cables - 2,5-70 mm² rigid cables
Operating temperature	-25 +40 °C	Protection	MCB
Electrocod	2221	Glow wire test	850 °C (Socket) - 960 °C (Case)
Colour	Red	Circuit breaker	125 A 25 kA C characteristic
Rated current InA (A)	110	Reference h	6
Rated voltage	380 - 415 V	Type of use	Heavy duty

DIMENSIONAL

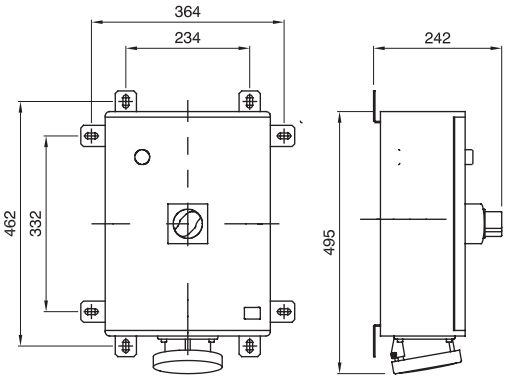

TECHNICAL SYMBOLOGY

200 °C

IP

IP66

IK

IK10

GWT

850 °C (Socket) - 960 °C (Case)

STANDARDS/APPROVALS

CE Reach Declaration

GEWISS S.p.A. Via A. Volta, 1
24069 Cenate Sotto - Bergamo - Italy
tel. +39 035 94 61 11 fax +39 035 94 69 09
Company subject to the management and coordination of Polifin S.p.A.

www.gewiss.com
sat@gewiss.com
Last update 06/05/2026

Data, measures, designs and pictures are shown only as informative purposes, and could be changed without previous notice