# Product Data Sheet

## GW66584

IB Range

Range of industrial sockets-outlets with rated current equal to 125A in compilance with IEC 60309, with electrical interlock and with MCCB or MCCB equipped with residual current device. The casing of the sockets is made in high performance polyester reinforced with fibre-glass, resistent tu UV rays according to EN 62208, impact and abonormal heat and fire. The robustness of the products and their resistance allow the installation in heavy duty environments and with critical atmospheric.

| | | | |
|---|---|---|---|
| Type | Vertical | Thermo-pressure with ball | 200 °C |
| Impact resistance at -20 °C | 20 J | IP degree | IP66 |
| No. of poles | 3P+N+E | Mechanical resistance | IK10 |
| Frequency | 50/60 Hz | Terminal tightening capacity | 2,5-50 mm² flexible cables - 2,5-70 mm² rigid cables |
| Operating temperature | -25 +40 °C | Protection | MCB |
| Electrocod | 2221 | Glow wire test | 850 °C (Socket) - 960 °C (Case) |
| Colour | Blue | Circuit breaker | 125 A 25 kA C characteristic |
| Rated current InA (A) | 110 | Reference h | 9 |
| Rated voltage | 200 - 250 V | Type of use | Heavy duty |

## DIMENSIONAL

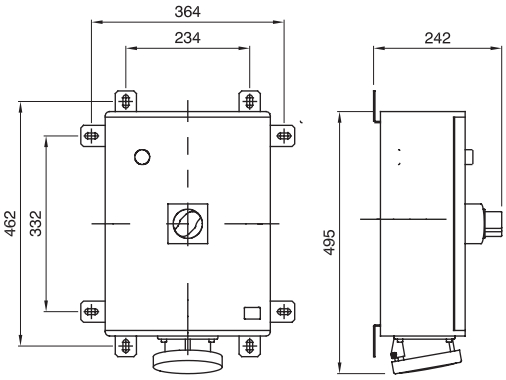


## TECHNICAL SYMBOLOGY

200 °C

**IP**

IP66

**IK**

IK10

**GWT**

850 °C (Socket) - 960 °C (Case)

## STANDARDS/APPROVALS

CE Reach Declaration

GEWISS S.p.A. Via A. Volta, 1
24069 Cenate Sotto - Bergamo - Italy
tel. +39 035 94 61 11 fax +39 035 94 69 09
Company subject to the management and coordination of Polifin S.p.A.

www.gewiss.com
sat@gewiss.com
Last update 06/05/2026

Data, measures, designs and pictures are shown only as informative purposes, and could be changed without previous notice