Product Data Sheet
GW66428

IB Range



Compact industrial socket-outlets complying with the IEC 60309 Standard (EN 60309-1 EN 60309-4), with more simple and intuitive longitudinal operation of the mechanical interlock. The control switch allows the plug to be connected and disconnected only in the open position, and the switch to close only with the plug inserted. The range of socket-outlets with interlock switch is combined with a complete range of accessories for individual or group surface-mounting, and for flushmounting (also possible on 3 gang rectangular boxes).

Type	Compact	Thermo-pressure with ball	125 °C
IP degree	IP44	No. of poles	3P+N+E
Mechanical resistance	IK08	Frequency	50/60 Hz
Operating temperature	-25 +40 °C	Protection	NO (SBF)
With back-mounting box	No	Electrocod	2220
Glow wire test	850 °C (active parts) - 650 °C (passive parts)	Colour	Blue
Rated current (A)	16	Reference h	9
Rated voltage	200 - 250 V		

BEHAVIOUR WITH CHEMICAL AND ATMOSPHERIC AGENTS

Saline solution	Acids		Bases		Solvents				Mineral oil	UV rays
	Concentrated	Diluited	Concentrated	Diluited	Hexane	Benzol	Acetone	Alcohol		
Limited resistance	Not resistant	Limited resistance	Limited resistance	Resistant	Resistant	Resistant	Resistant	Resistant	Resistant	Resistant

DIMENSIONAL

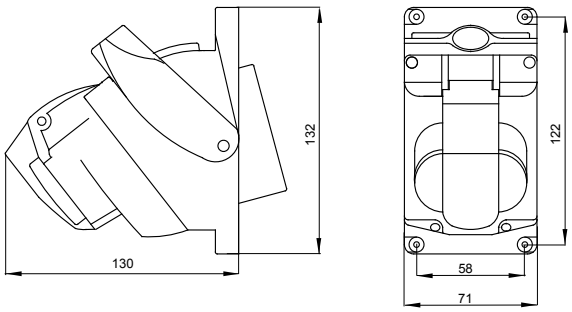

TECHNICAL SYMBOLOGY



125 °C

IP

IP44

IK

IK08

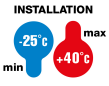

-25 +40 °C

GWT

850 °C (active parts) - 650 °C (passive parts)

STANDARDS/APPROVALS



GEWISS S.p.A. Via A. Volta, 1
24069 Cenate Sotto - Bergamo - Italy
tel. +39 035 94 61 11 fax +39 035 94 69 09
Company subject to the management and coordination of Polifin S.p.A.

www.gewiss.com
sat@gewiss.com
Last update 24/11/2026

Data, measures, designs and pictures are shown only as informative purposes, and could be changed without previous notice