46 QP

GEWISS

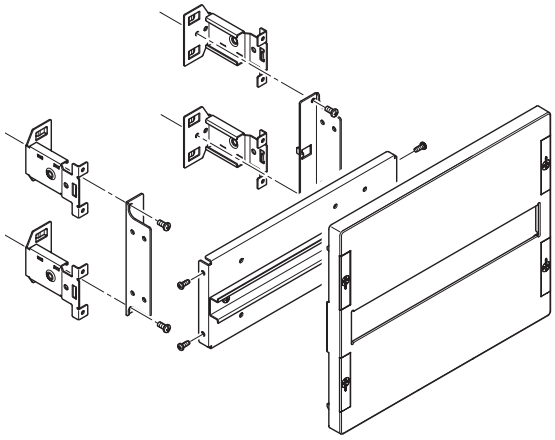

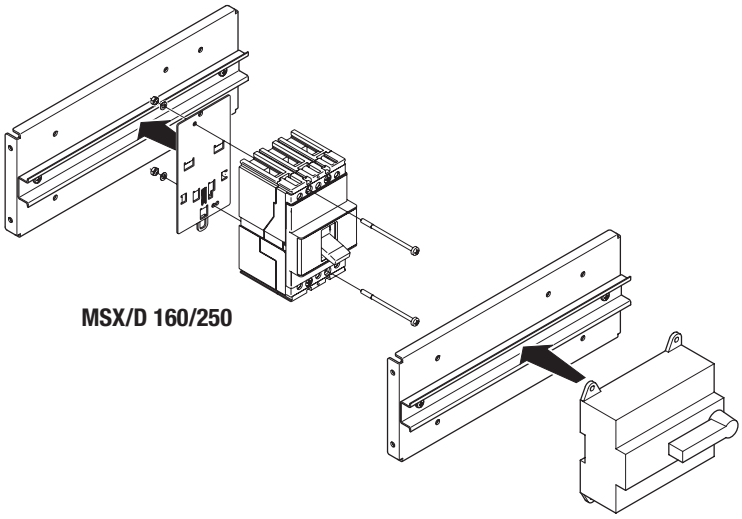

500x405x200	**GW 46 570F**
650x405x200	**GW 46 570F**
650x515x250	**GW 46 571F**
800x585x300	**GW 46 572F**
1060x800x350	**GW 46 573F**

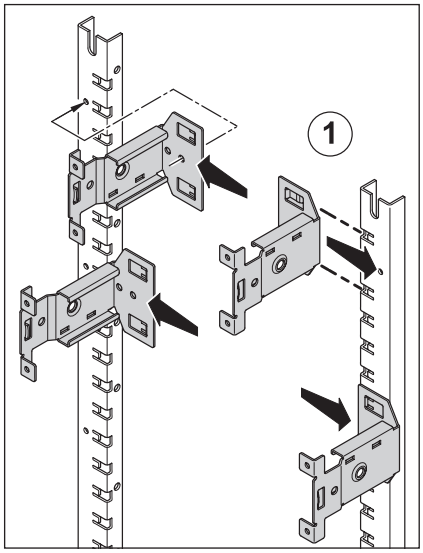

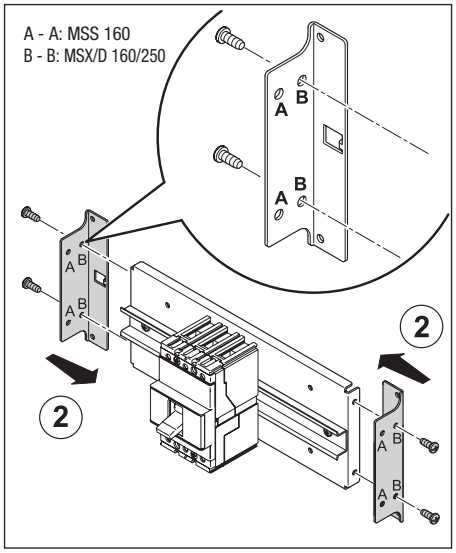

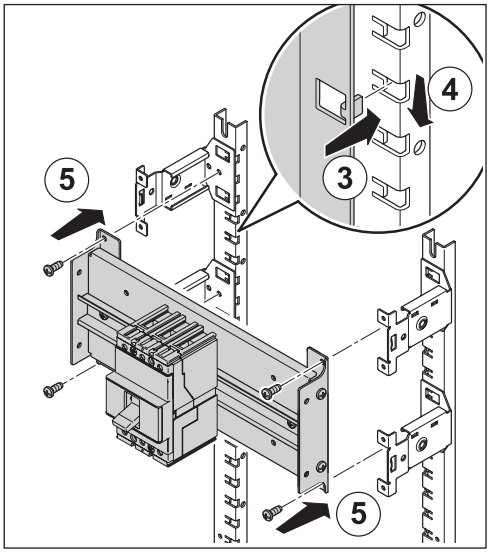

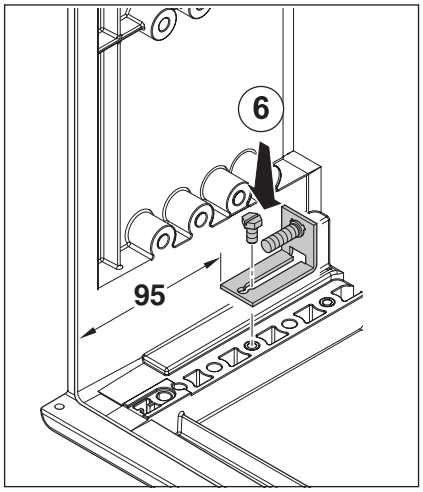

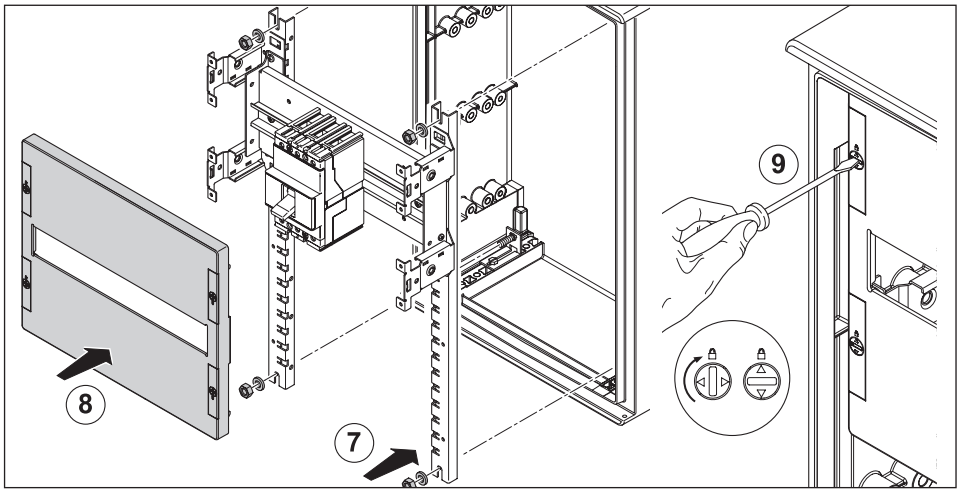

75744516

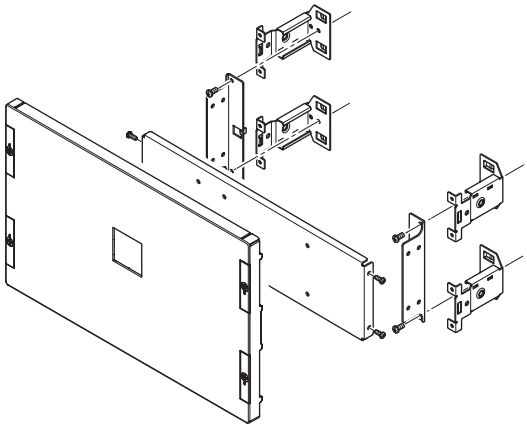

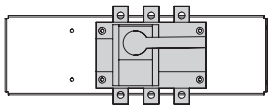

MSS 250 3P

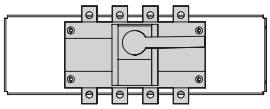

MSS 250 4P

650x515x250	**GW 46 577F**
800x585x300	**GW 46 578F**
1060x800x350	**GW 46 579F**

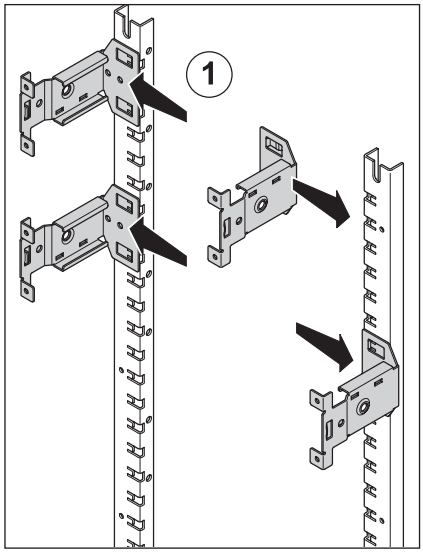

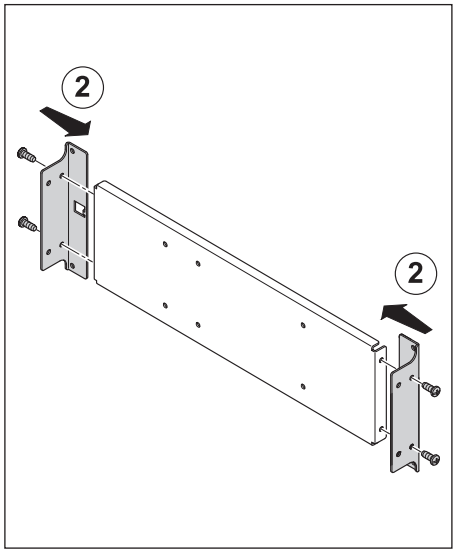

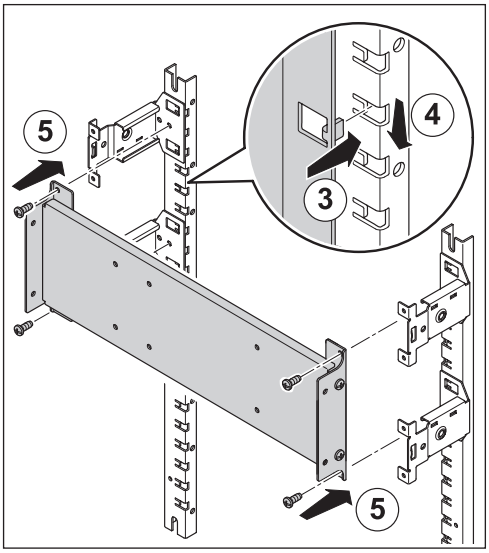

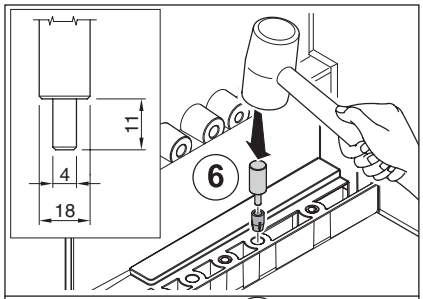

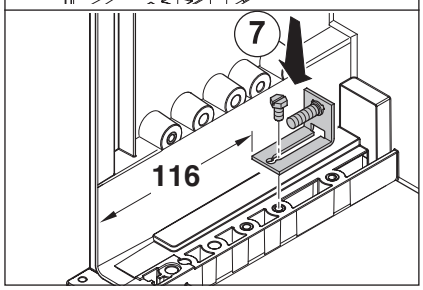

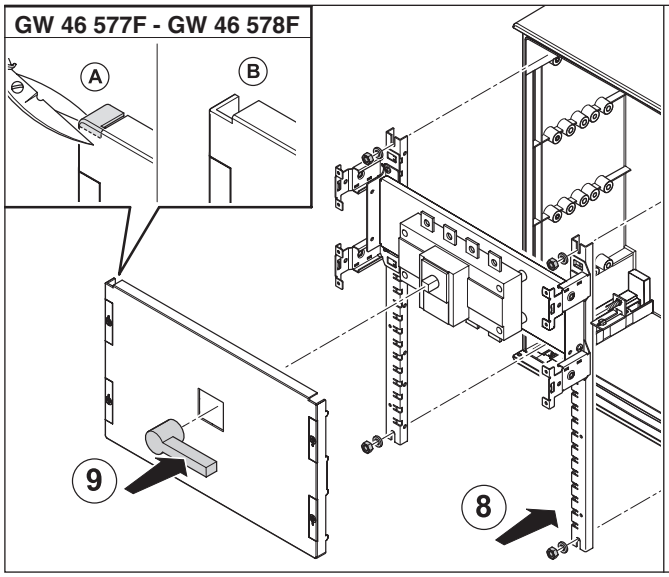

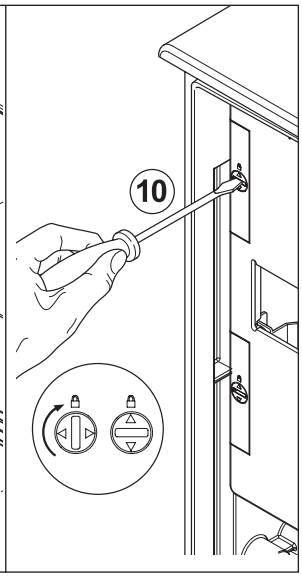

Punto di contatto indicato in adempimento ai fini delle direttive e regolamenti UE applicabili:
Contact details according to the relevant European Directives and Regulations:
GEWISS S.p.A. Via D.Bosatelli, 1 IT-24069 Cenate Sotto (BG) Italy tel: +39 035 946 111 E-mail: qualitymarks@gewiss.com

According to applicable UK regulations, the company responsible for placing the goods in UK market is:
GEWISS UK LTD - Unity House, Compass Point Business Park, 9 Stocks Bridge Way, ST IVES Cambridgeshire, PE27 5JL, United Kingdom tel: +44 1954 712757 E-mail: gewiss-uk@gewiss.com

+39 035 946 111
8:30 - 12:30 / 14:00 - 18:00
lunedì - venerdì / monday - friday

www.gewiss.com

ULTIMA REVISIONE 11/2024