QDSA

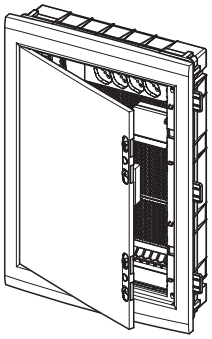

GW 40 390 F

CEI 306-2	
EN 60670-1	
EN 60670-24	
CEI 23-50	
IEC 60884-1	

Pde	50W
Un	250V
Ui	750V
EN50267-2-2	Halogen free
	-15°C ≤ T ≤ +60°C

EN 60529	IP40
EN 62262	IK08
EN 60695-10-2	70°C
EN 69695-2-11	GWT 650°C - GWT 850°C

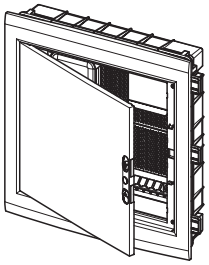

GW 40 390 C

CEI 306-2	
EN 60670-1	
EN 60670-24	
CEI 23-50	
IEC 60884-1	

Pde	40W
Un	250V
Ui	750V
EN50267-2-2	Halogen free
	-15°C ≤ T ≤ +60°C

EN 60529	IP40
EN 62262	IK08
EN 60695-10-2	70°C
EN 69695-2-11	GWT 650°C - GWT 850°C

	4x10					3,5x16	3,5x22
	A	B	C	D	E	F	G
GW 40 390 F	24	6	6	6	3	4	
GW 40 390 C	16	4	4	4	2		4

		4x45					
	H	I	L	M	N	O	P
GW 40 390 F	8	4	1	6	6	1	1
GW 40 390 C	8	4		5			1

GW 38 311	**GW 38 338** **GW 38 341** - 15m **GW 38 342** - 30m **GW 38 343** - 50m **GW 38 344** - 65m	**GW 38 098**

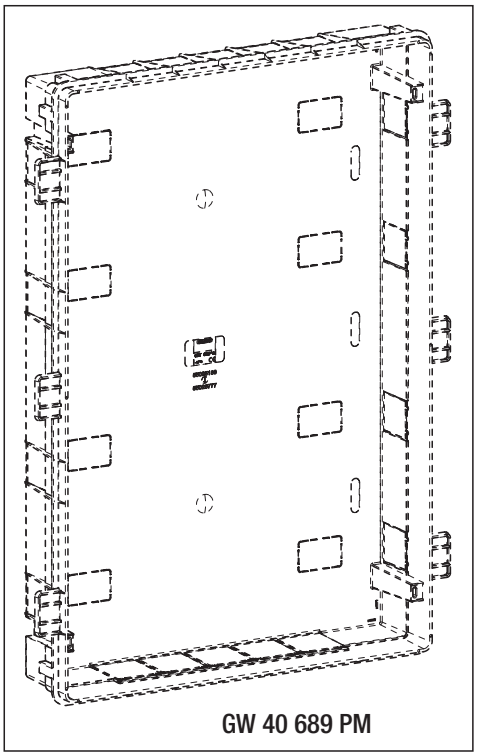

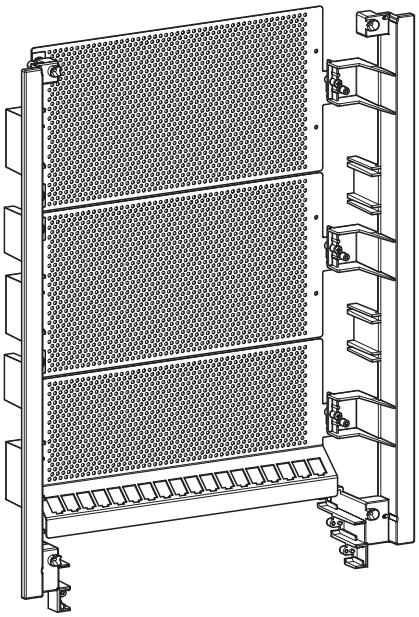

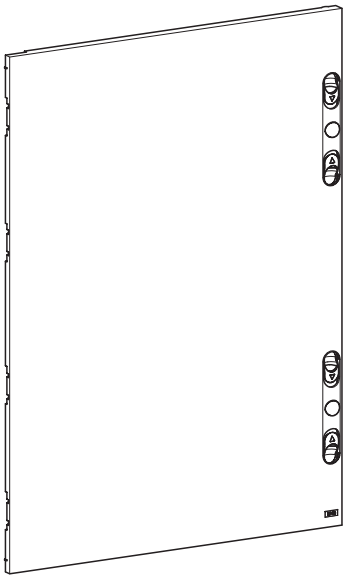

GWT 850°C

GWT 650°C

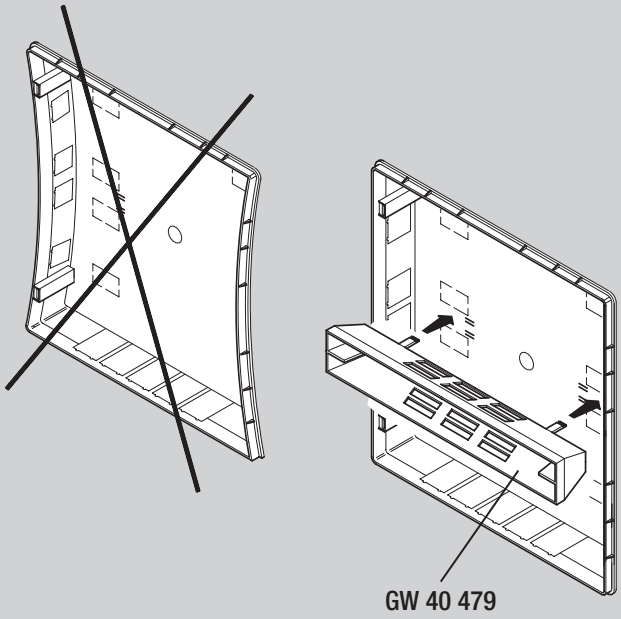

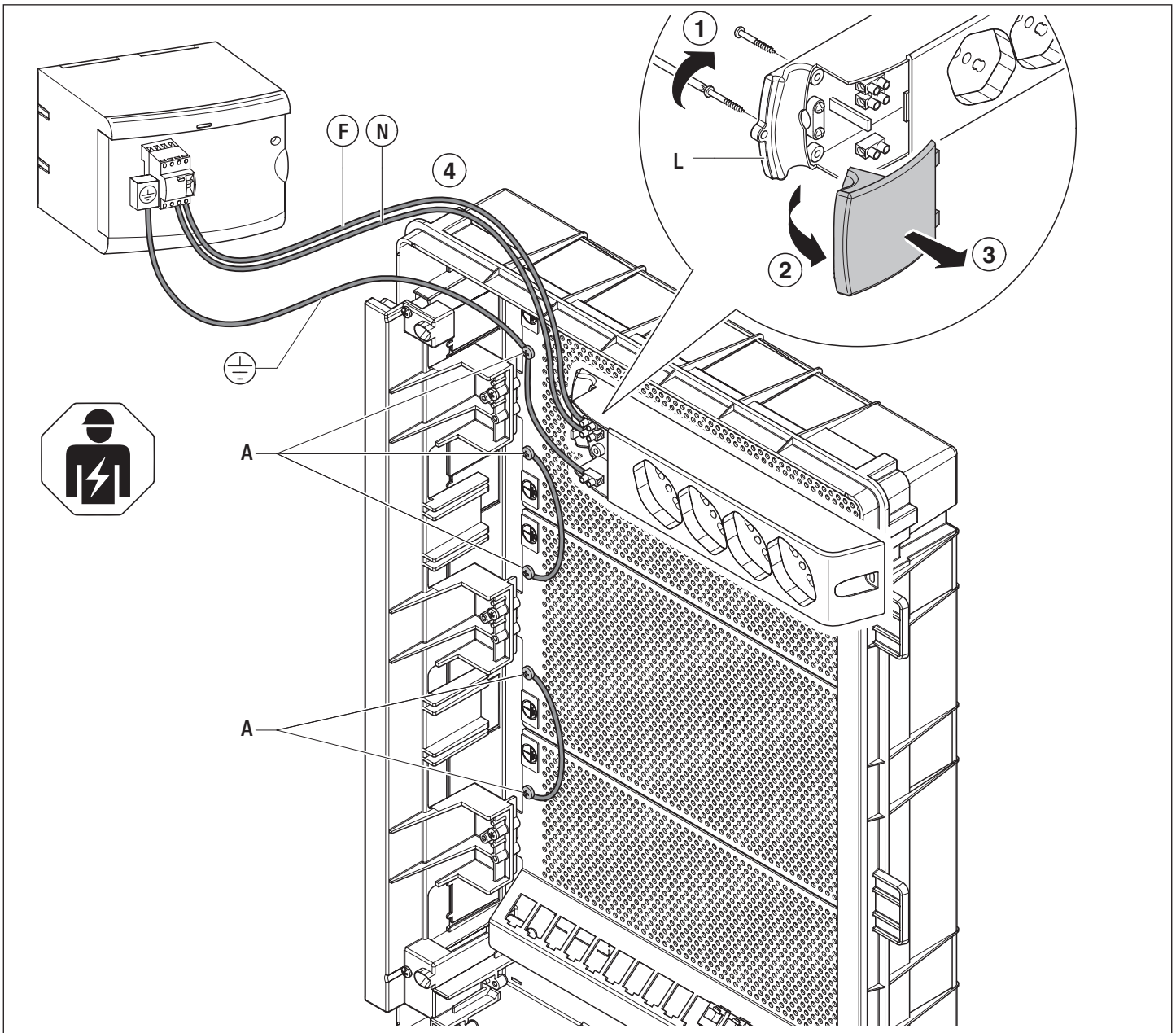
1
2
3
L
F
N
4
A
A

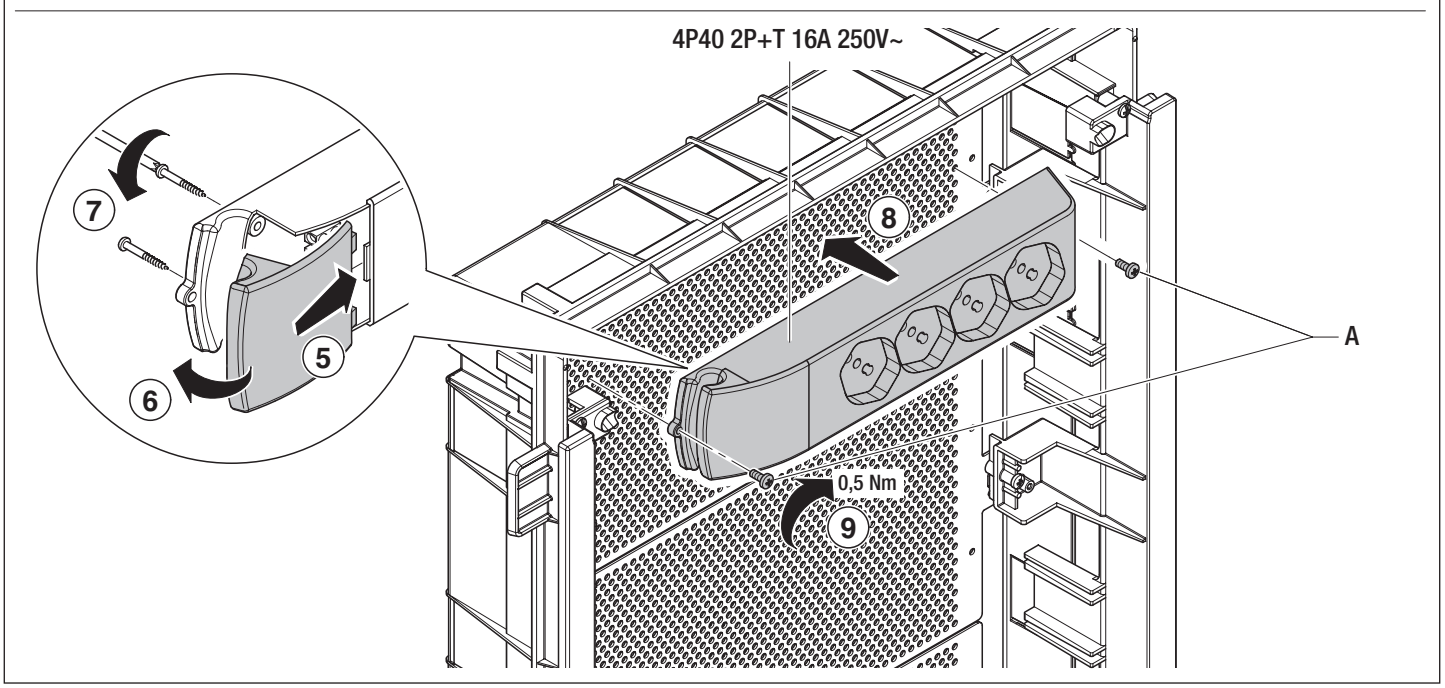
4P40 2P+T 16A 250V~
7
6
5
8
9
0,5 Nm
A

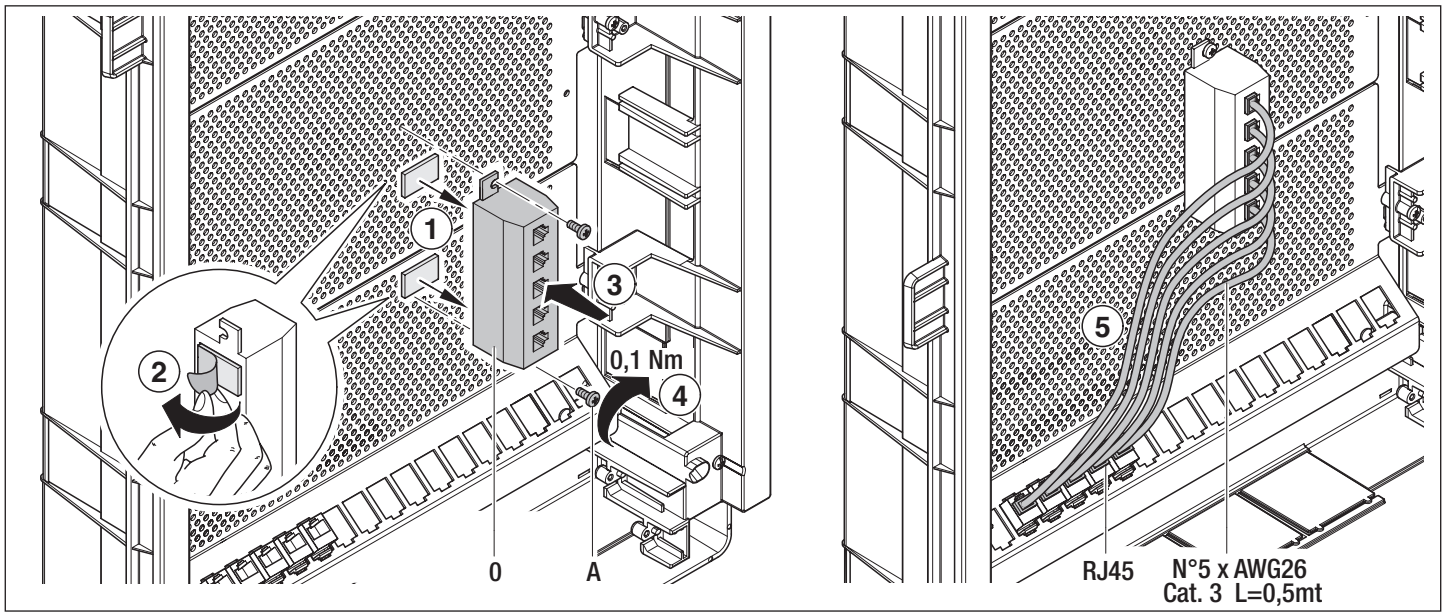
1
2
3
0,1 Nm
4
0
A
5
RJ45
N°5 x AWG26
Cat. 3 L=0,5mt

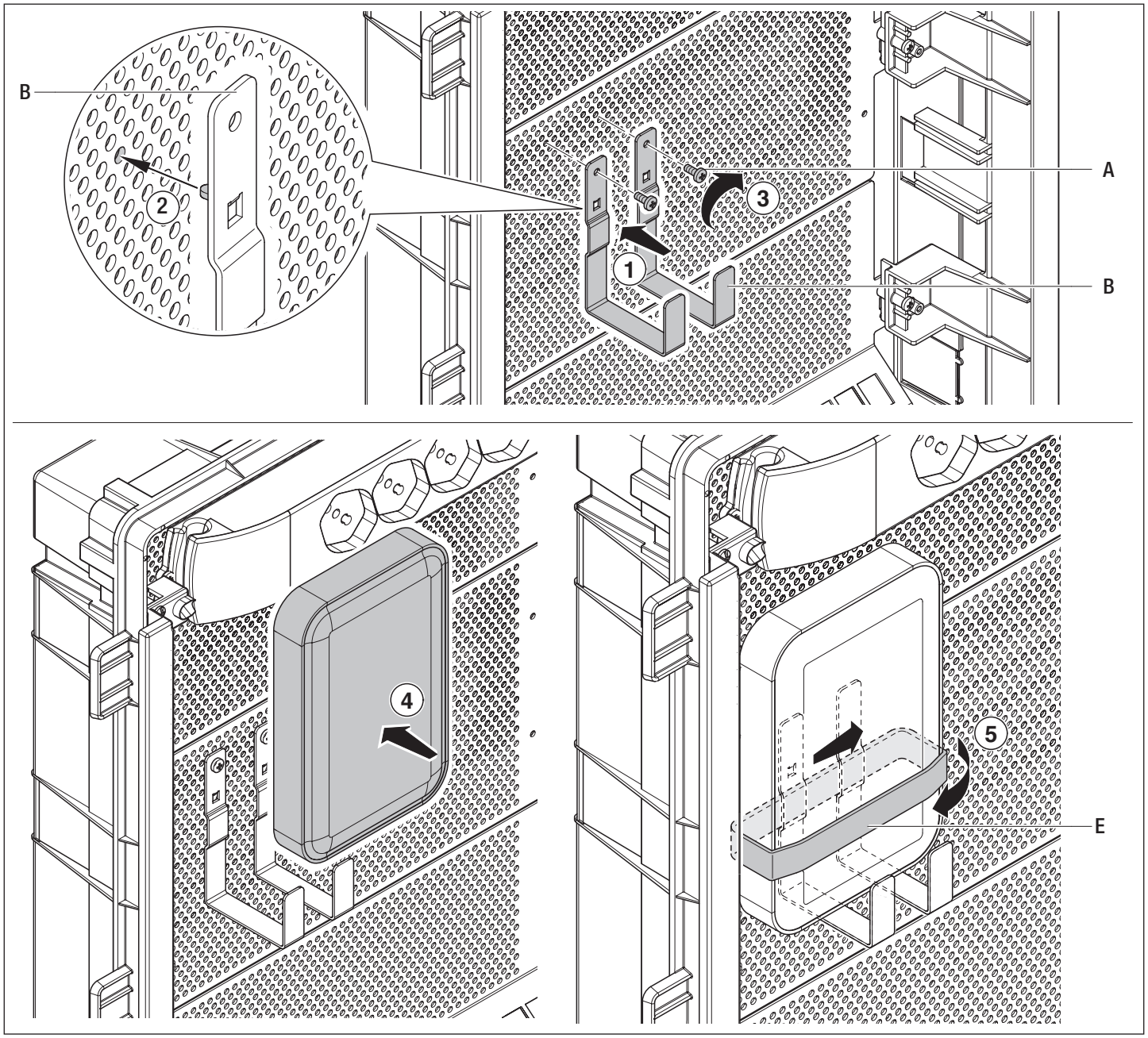
B
2
A
3
1
B
4
5
E

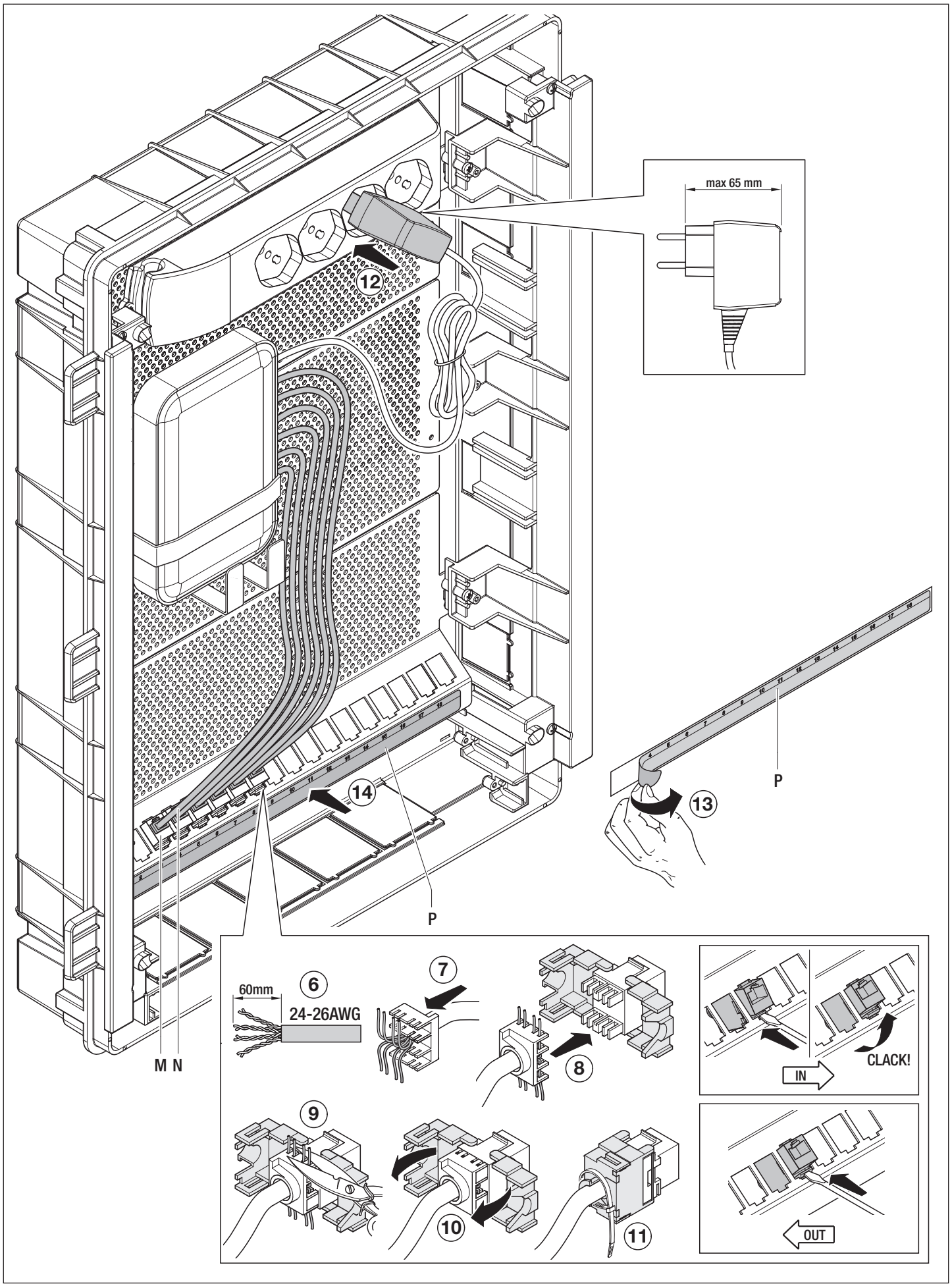
max 65 mm
12
13
14
P
P
M N
60mm
6
24-26AWG
7
8
9
10
11
CLACK!
IN
OUT

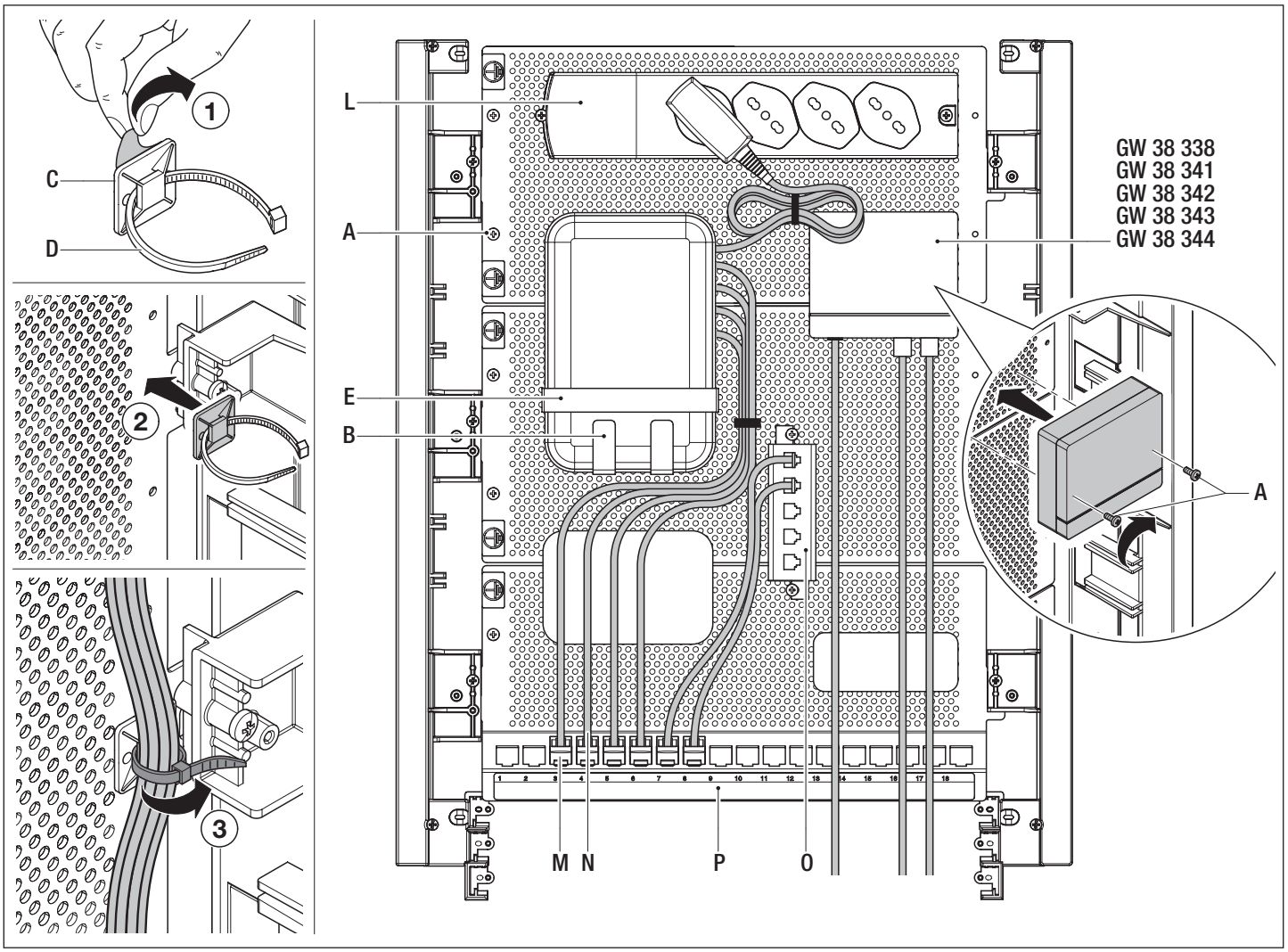
1
C
D
2
3
L
A
E
B
GW 38 338
GW 38 341
GW 38 342
GW 38 343
GW 38 344
A
M N
P
O

GW 40 390 F

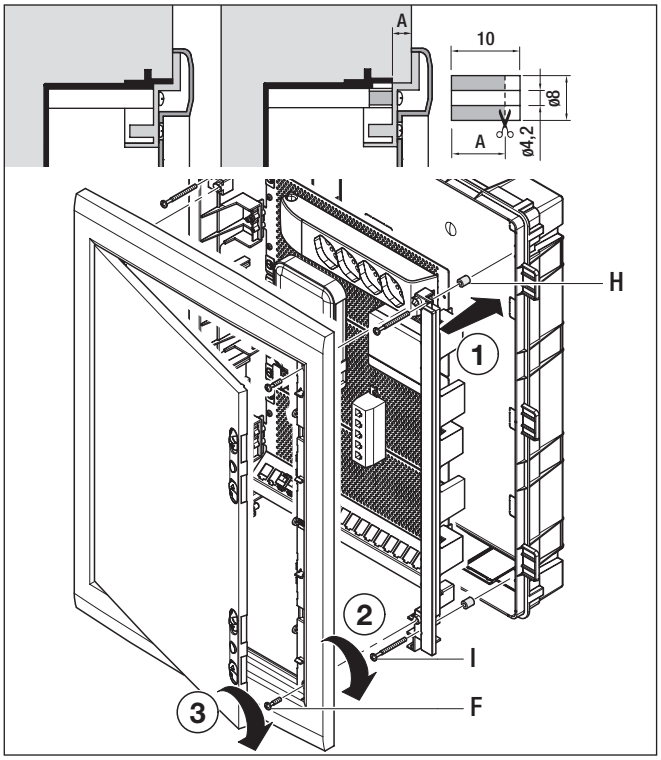
A
10
ø8
A
ø4,2
H
1
2
I
3
F

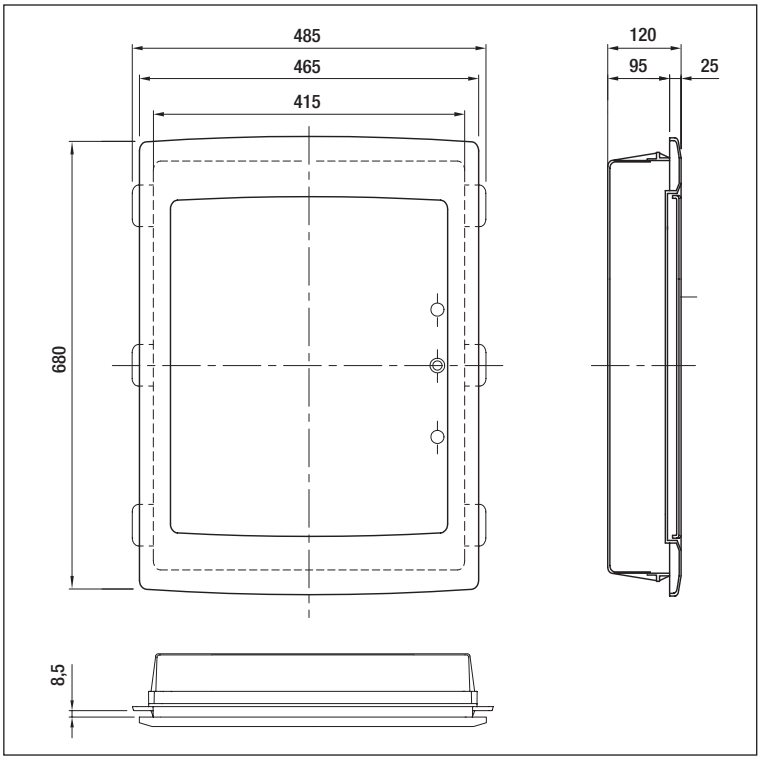
485
465
415
680
8,5
120
95
25

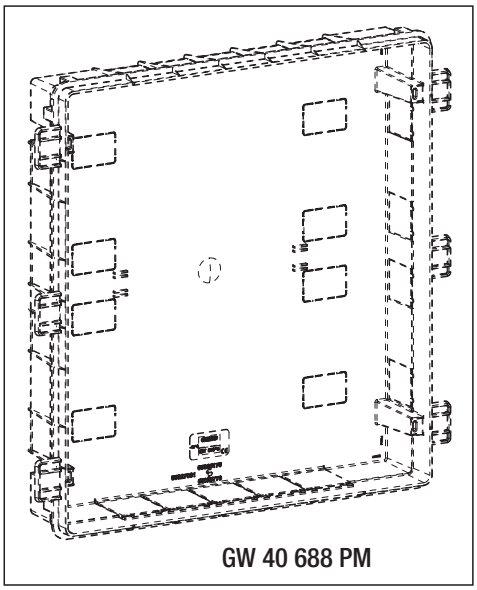

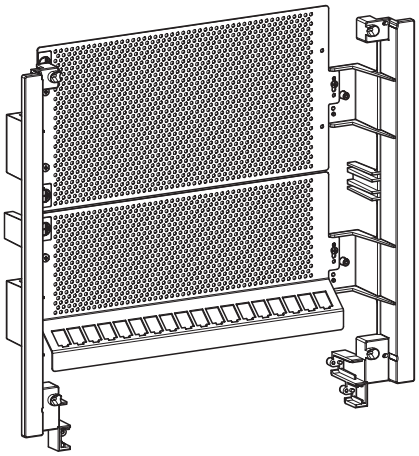

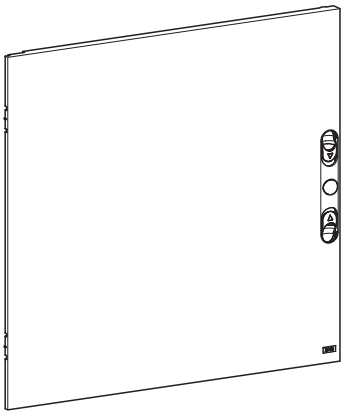

GWT 850°C

GWT 650°C

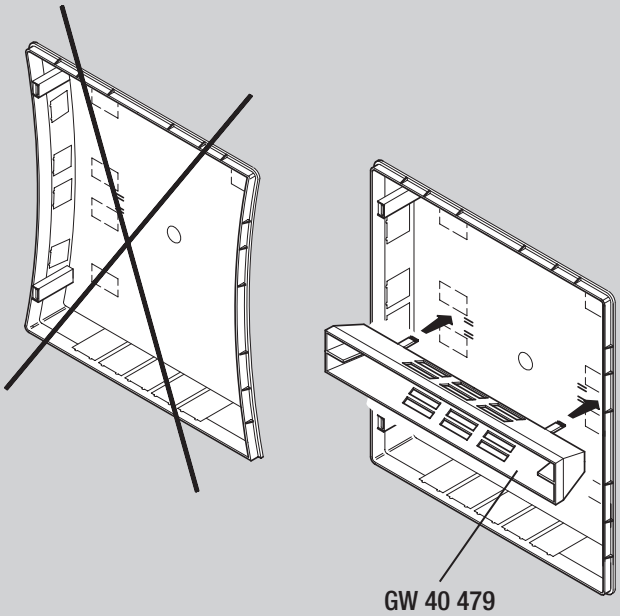

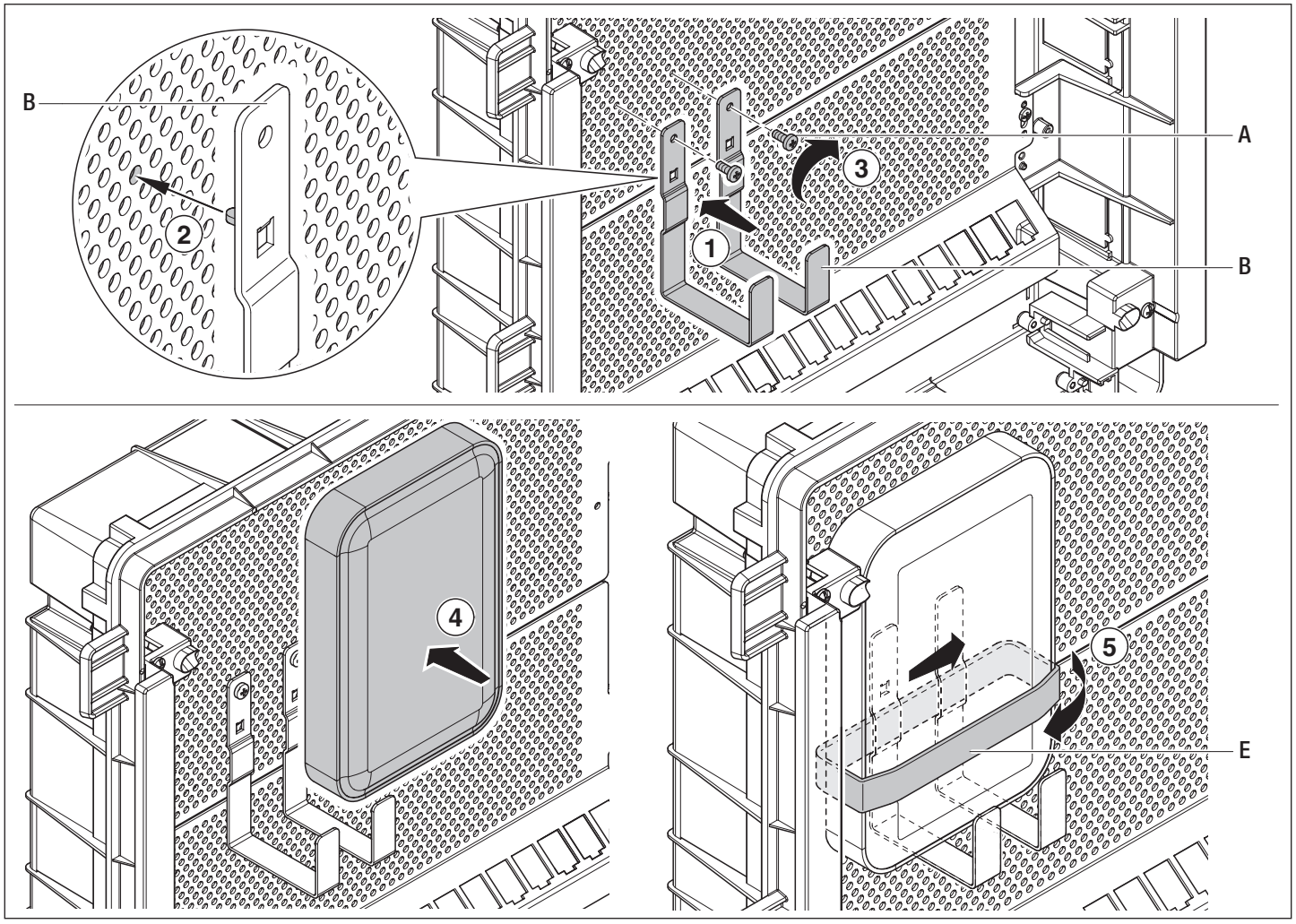
B
2
1
3
A
B
4
5
E

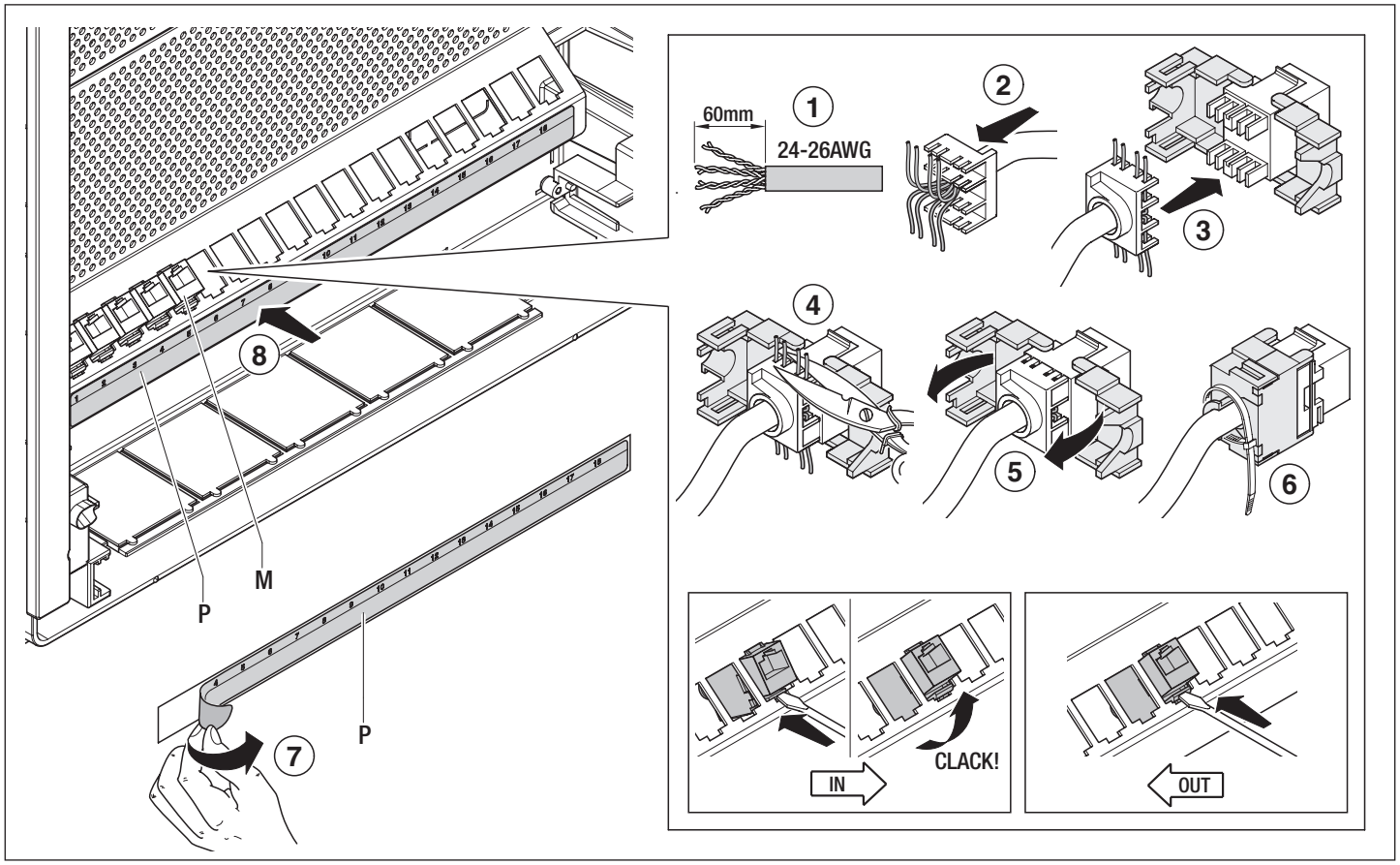
8
P
M
P
7
60mm
1
24-26AWG
2
3
4
5
6
CLACK!
IN
OUT

GW 40 390 C

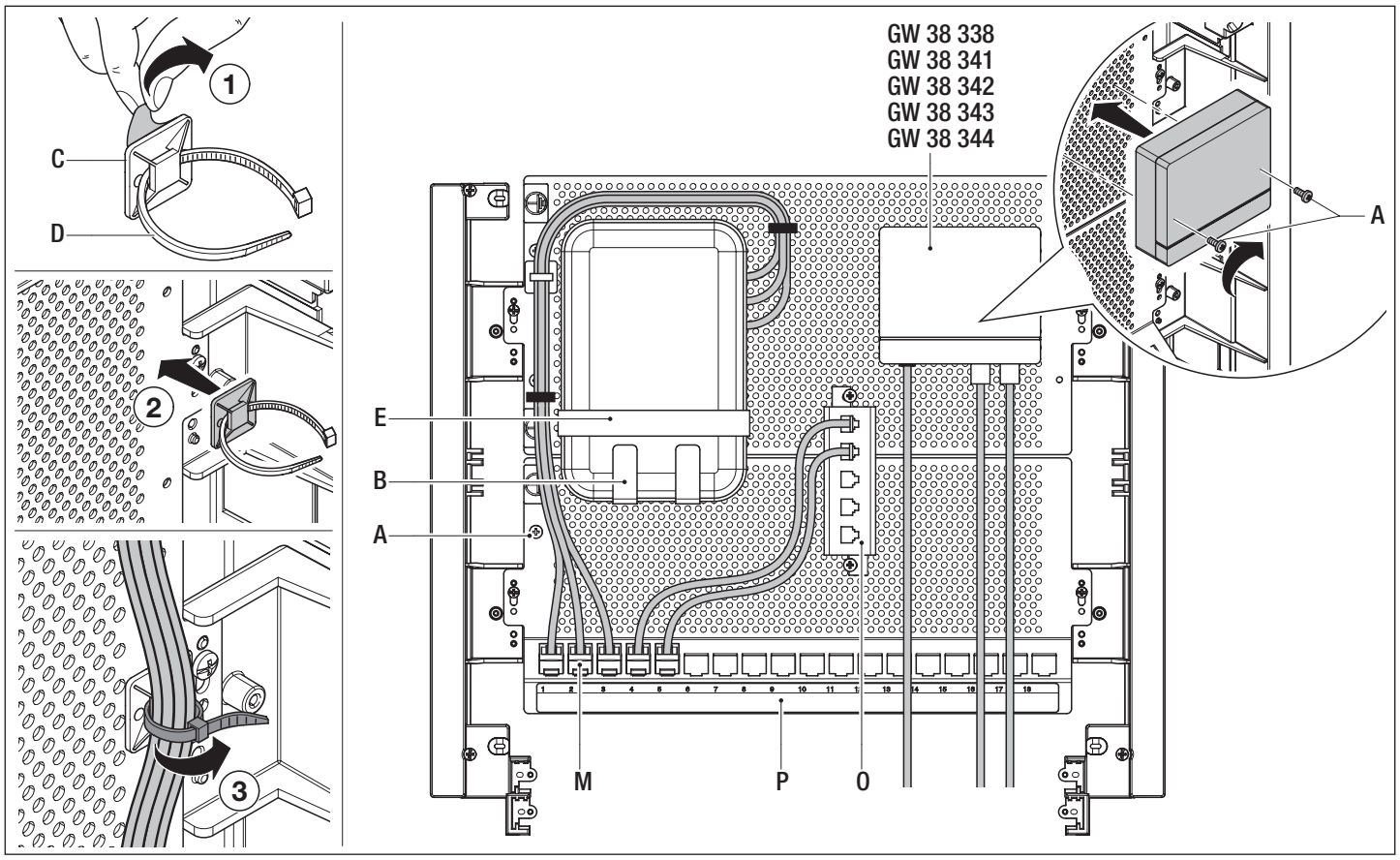

GW 40 390 C

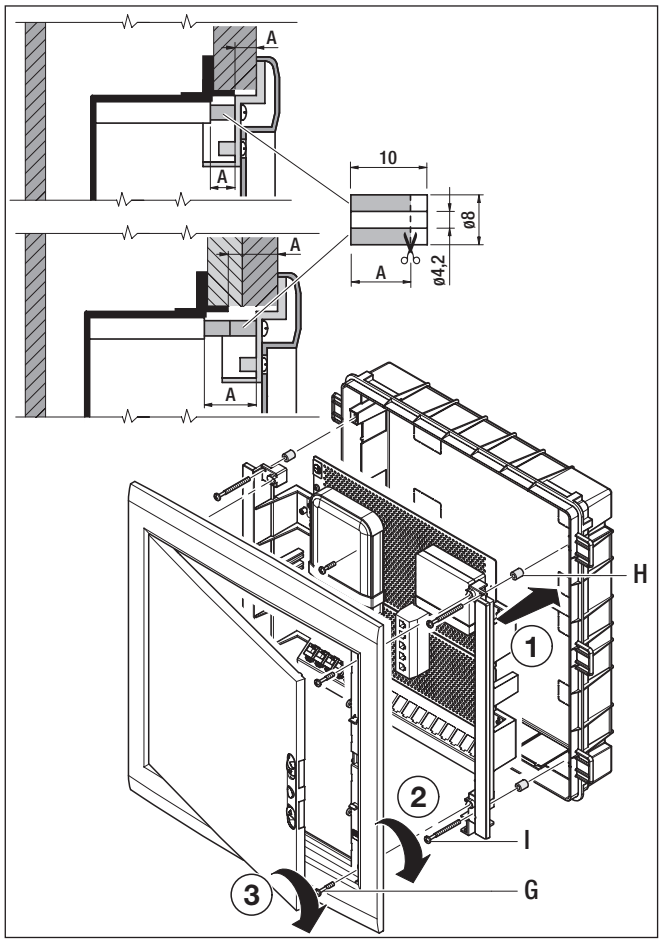

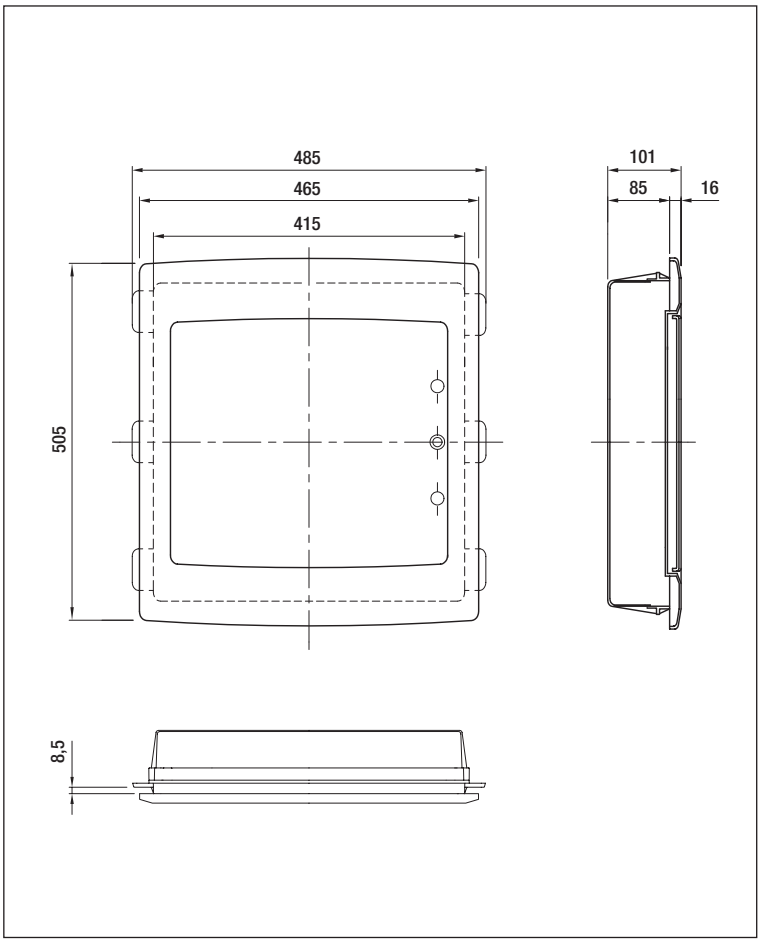

cod. 7.57.4.442.5

Punto di contatto indicato in adempimento ai fini delle direttive e regolamenti UE applicabili:
Contact details according to the relevant European Directives and Regulations:
GEWISS S.p.A. Via D.Bosatelli, 1 IT-24069 Cenate Sotto (BG) Italy tel: +39 035 946 111 E-mail: qualitymarks@gewiss.com

According to applicable UK regulations, the company responsible for placing the goods in UK market is:
GEWISS UK LTD - Unity House, Compass Point Business Park, 9 Stocks Bridge Way, ST IVES Cambridgeshire, PE27 5JL, United Kingdom tel: +44 1954 712757 E-mail: gewiss-uk@gewiss.com

+39 035 946 111
8:30 - 12:30 / 14:00 - 18:00
lunedì - venerdì / monday - friday

www.gewiss.com

ULTIMA REVISIONE 02/2024