40 CD DE

GEWISS

IP40

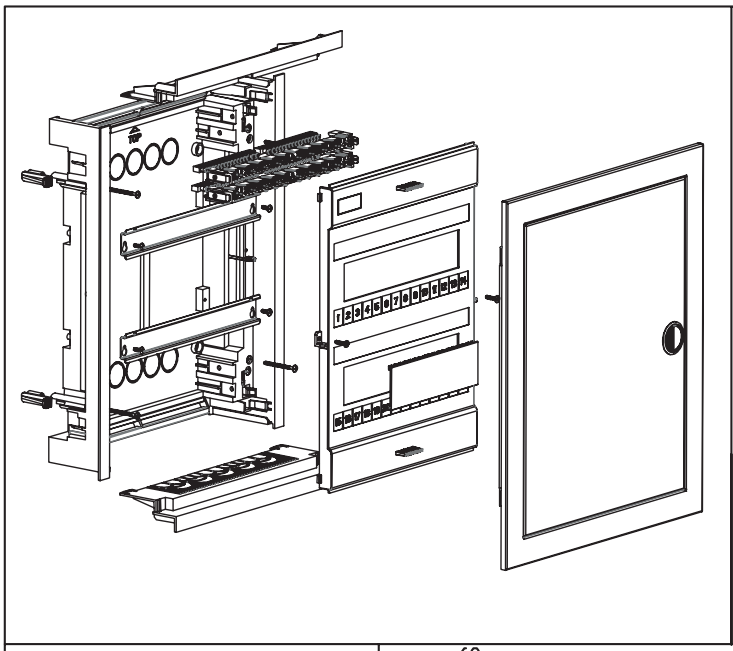

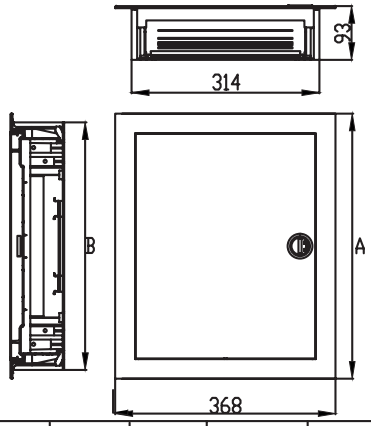

CODE	A [mm]	B [mm]	IEC 60670-24 Pde [W]	DIN 43871 Pde [W]	T [°C]
GW 40 161N	343	314	60	16	(-15)-(60)
GW 40 162N	443	414	80	19	(-15)-(60)
GW 40 163N	568	539	90	24	(-15)-(60)
GW 40 164N	753	724	100	27	(-15)-(60)
GW 40 165N	878	849	100	27	(-15)-(60)

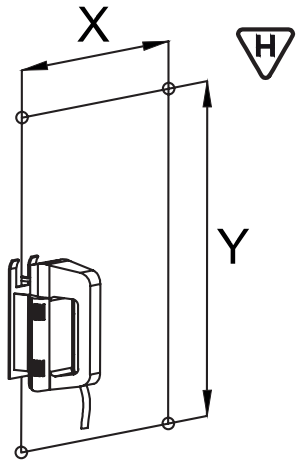

CODE	X [mm]	Y [mm]
GW 40 161N	314	314
GW 40 162N	314	414
GW 40 163N	314	539
GW 40 164N	314	724
GW 40 165N	314	849

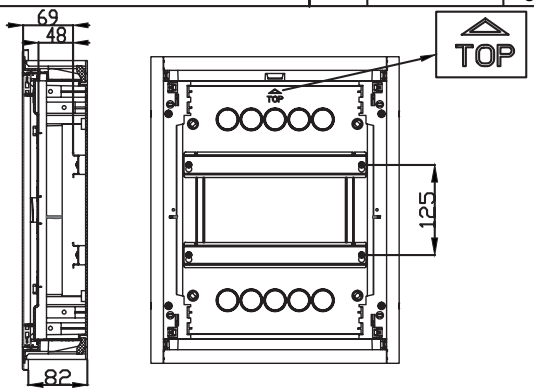

CODE	EN50022 18mm
GW 40 161N	12+2
GW 40 162N	24+4(12x2)
GW 40 163N	36+6(12x3)
GW 40 164N	48+8(12x4)
GW 40 165N	60+10(12x5)

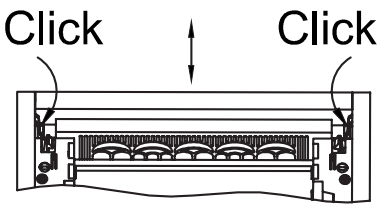

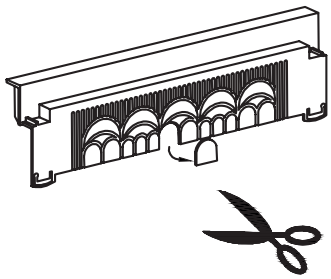

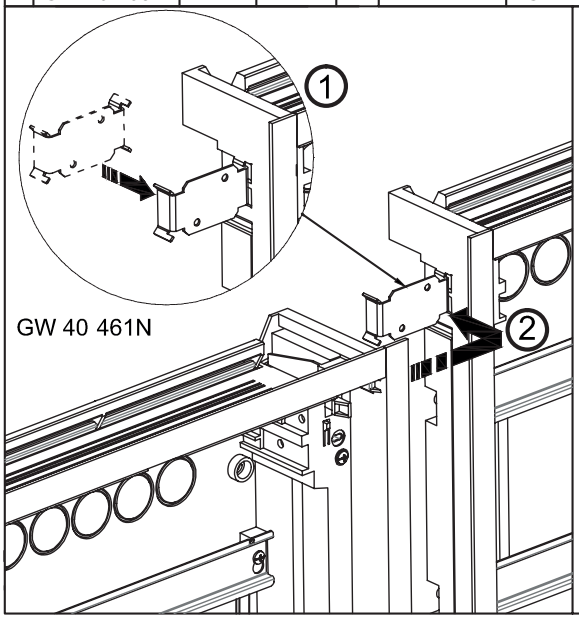

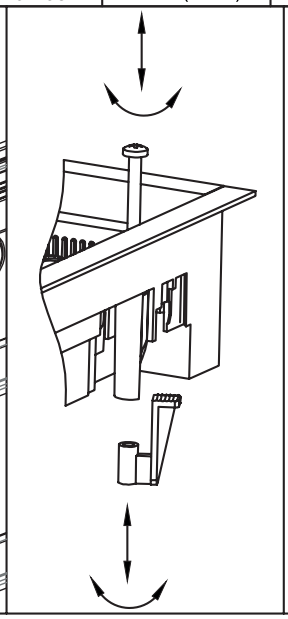

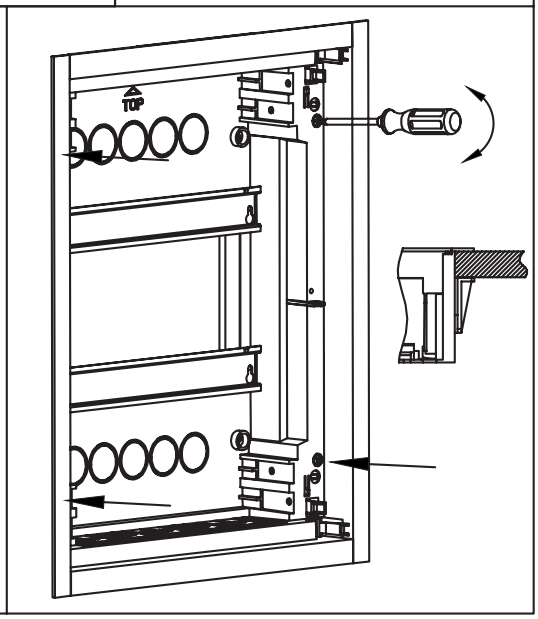

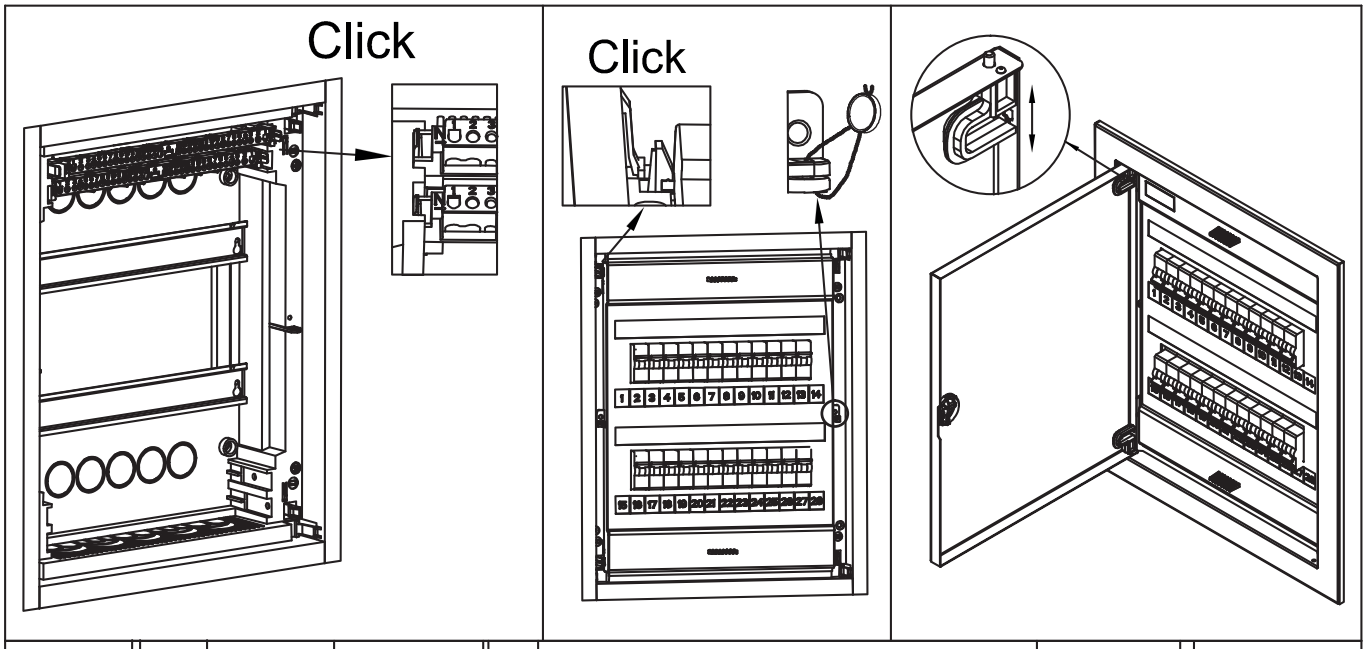

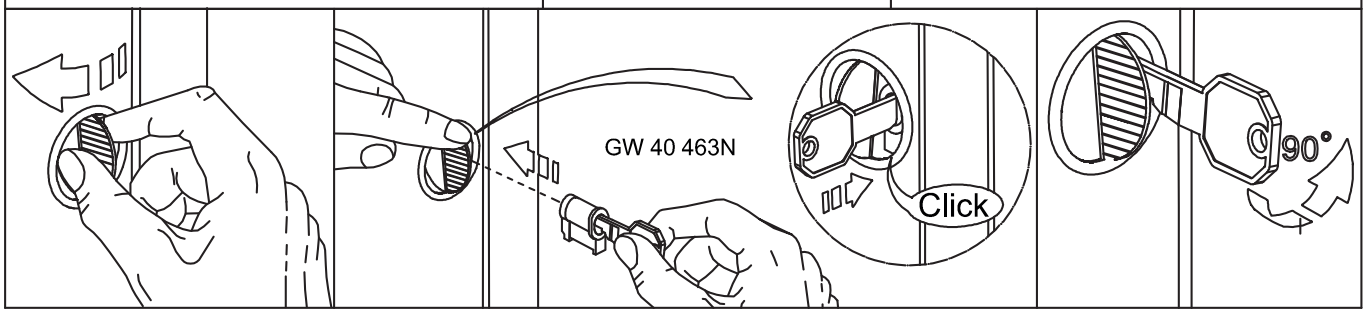

	N	⏚	N	⏚
GW 40 161N	(2x16)+(8x10)	(2x16)+(8x10)	(2x10)+(8x6)	(2x10)+(8x6)
GW 40 162N	(2x16)+(14x10)	(2x16)+(14x10)	(2x10)+(14x6)	(2x10)+(14x6)
GW 40 163N	2x[(2x16)+(14x10)]	2x[(2x16)+(14x10)]	2x[(2x10)+(14x6)]	2x[(2x10)+(14x6)]
GW 40 164N	2x[(2x16)+(14x10)]	2x[(2x16)+(14x10)]	2x[(2x10)+(14x6)]	2x[(2x10)+(14x6)]
GW 40 165N	2x[(2x16)+(14x10)]	2x[(2x16)+(14x10)]	2x[(2x10)+(14x6)]	2x[(2x10)+(14x6)]

GW 40 461N	GW 40 467	GW 40 463N	GW 40 454N	GW 40 455N
				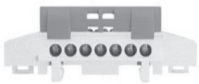

IEC 60670-24 GP	Un	Ui	In
	400V	1000V	63A

IEC 60670-24 PD	Un	Ui	In	IK
	400V	1000V	63A	07

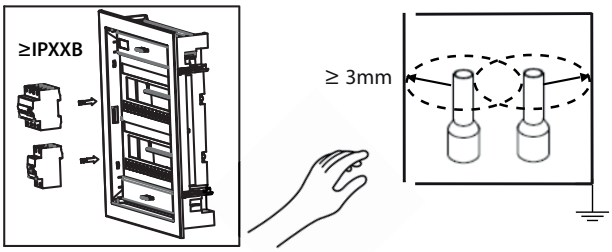

Punto di contatto indicato in adempimento ai fini delle direttive e regolamenti UE applicabili:
Contact details according to the relevant European Directives and Regulations:
GEWISS S.p.A. Via D.Bosatelli, 1 IT-24069 Cenate Sotto (BG) Italy tel: +39 035 946 111 E-mail: qualitymarks@gewiss.com

According to applicable UK regulations, the company responsible for placing the goods in UK market is:
GEWISS UK LTD - Unity House, Compass Point Business Park, 9 Stocks Bridge Way, ST IVES Cambridgeshire, PE27 5JL, United Kingdom tel: +44 1954 712757 E-mail: gewiss-uk@gewiss.com

+39 035 946 111
8:30 - 12:30 / 14:00 - 18:00
lunedì - venerdì / monday - friday

www.gewiss.com

cod. 7.50.3.392.8
ULTIMA REVISIONE 02/2024