DATA CENTER

GEWISS

IP20 CE

LxP: 600x600mm - 19”
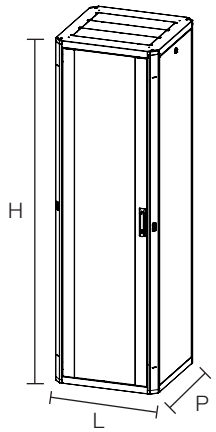
GW38451: H 1200mm (24U) GW38452: H 1500mm (30U) GW38453: H 2000mm (42U)

	1000 Kg 1000 Kg 360 Kg

	GW 38 472	GW 38 451 GW 38 452 GW 38 453
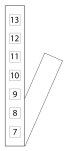	GW 38 473	
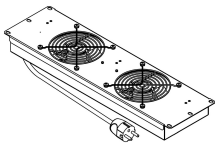	GW 38 479	
	GW 38 480 600x600mm	
	GW 38 483	
	GW 38 484	

		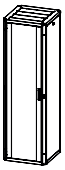
	GW 38 474 24U	GW 38 451
	GW 38 475 30U	GW 38 452
	GW 38 476 42U	GW 38 453
	GW 38 557	GW 38 451 GW 38 452 GW 38 453
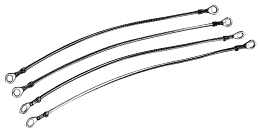	GW 38 558	

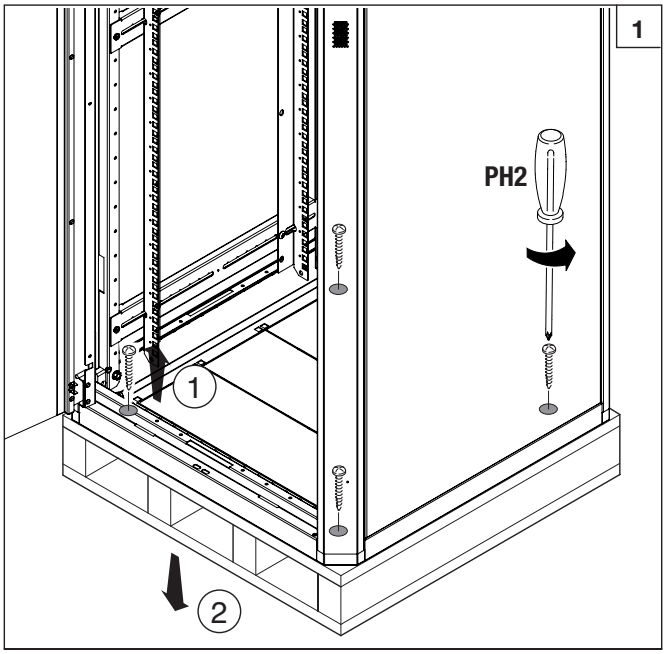
1
PH2
1
2

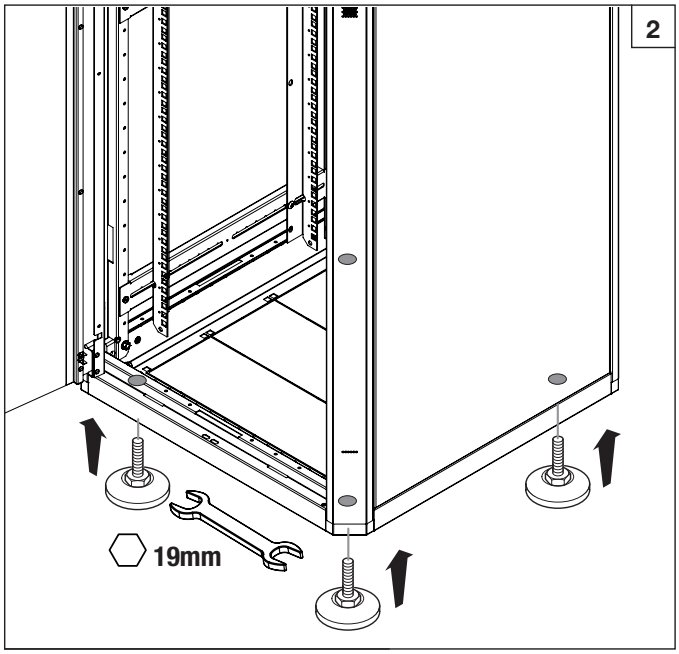
2
19mm

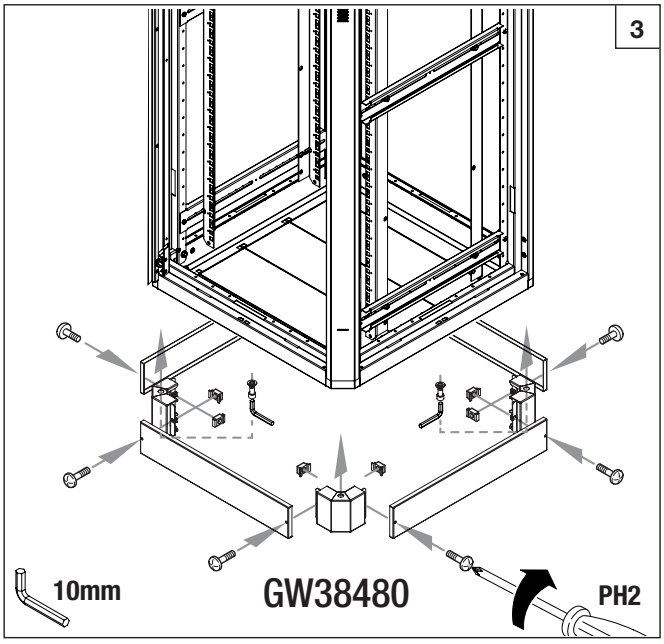
3
10mm
GW38480
PH2

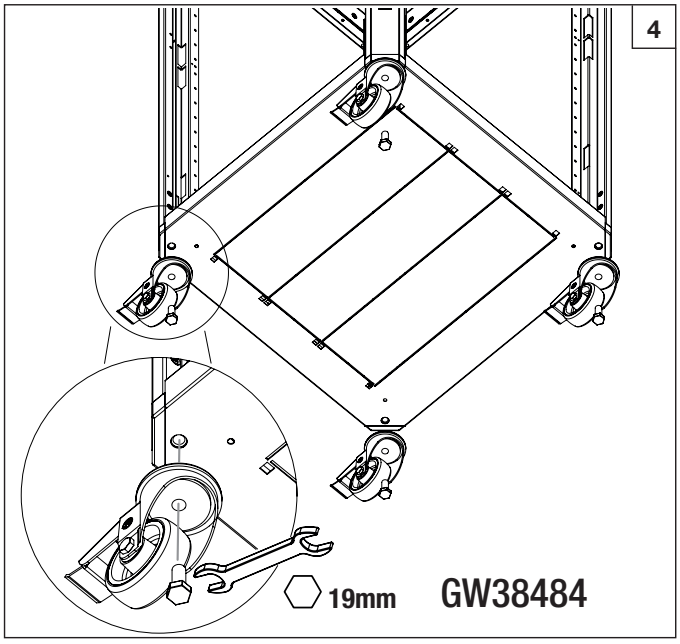
4
19mm
GW38484

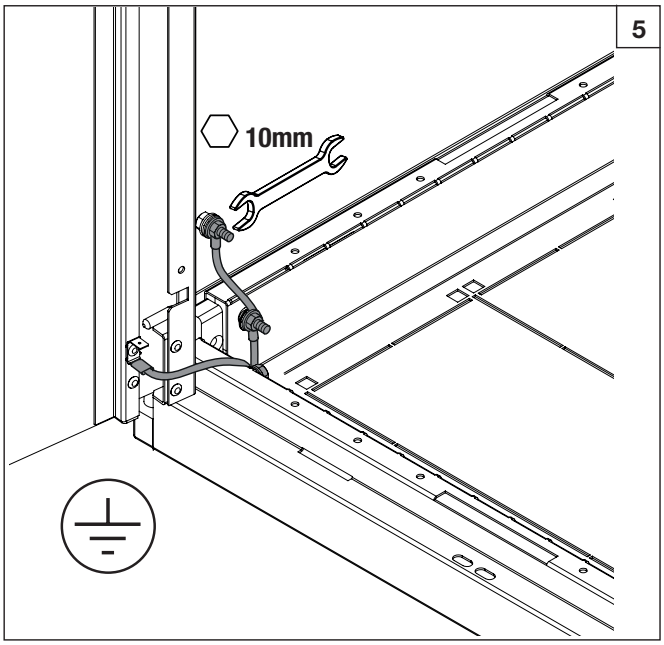
5
10mm

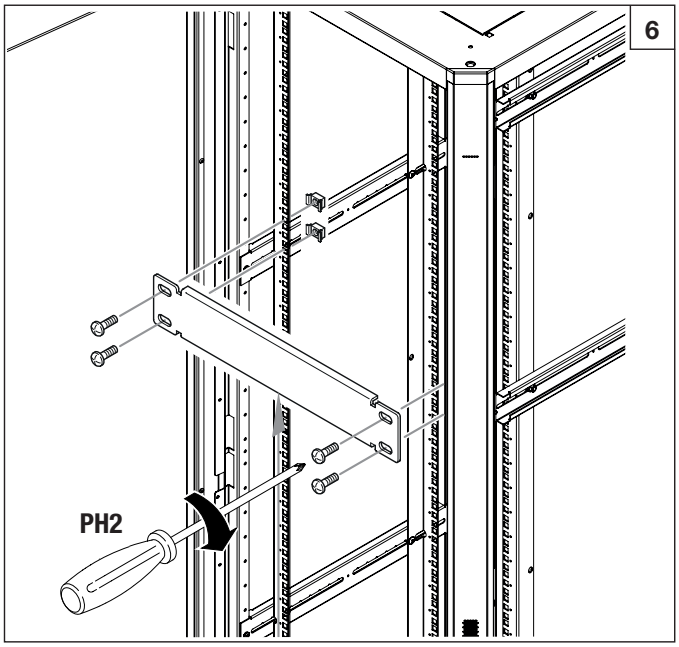
6
PH2

7

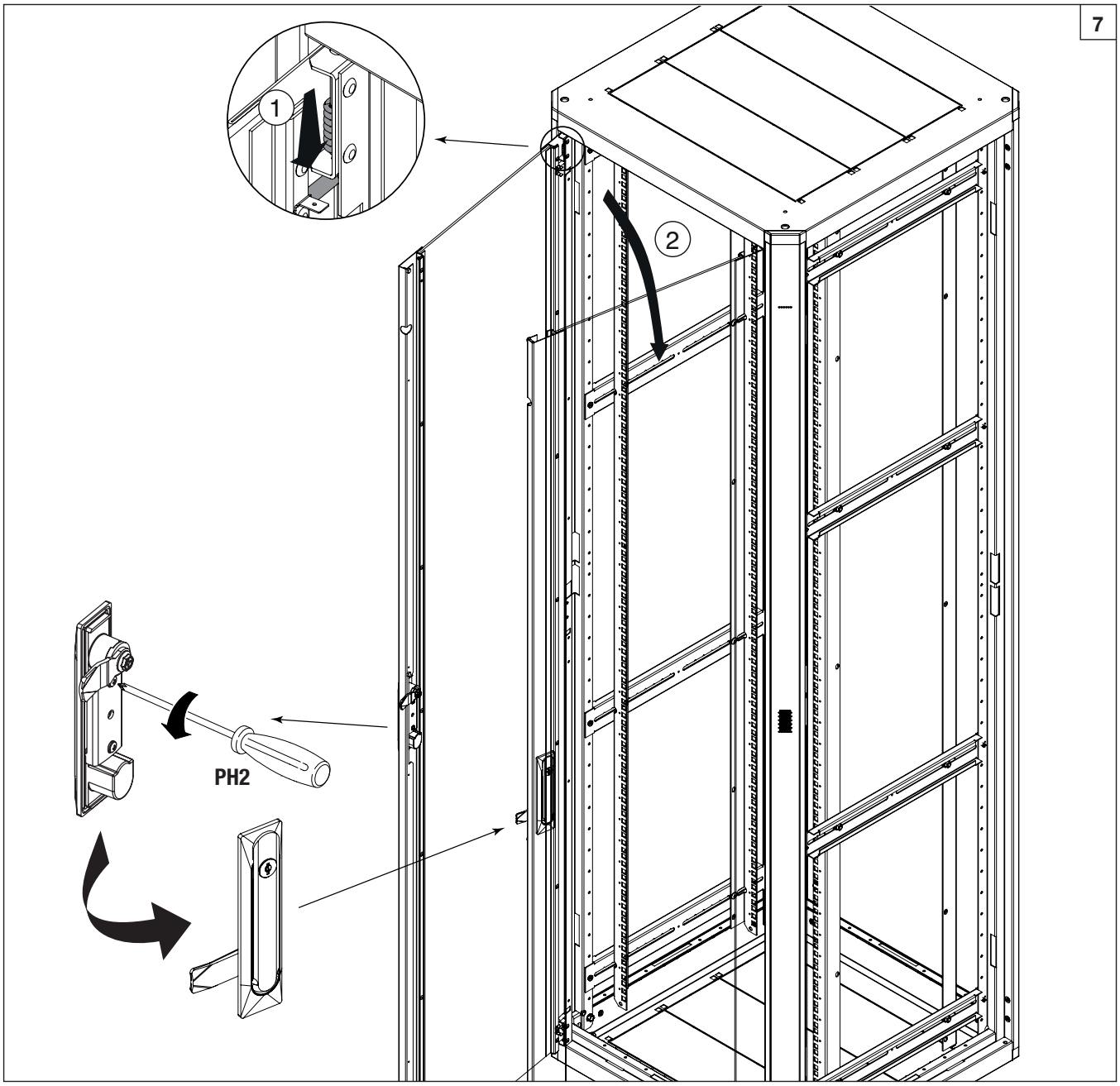

8

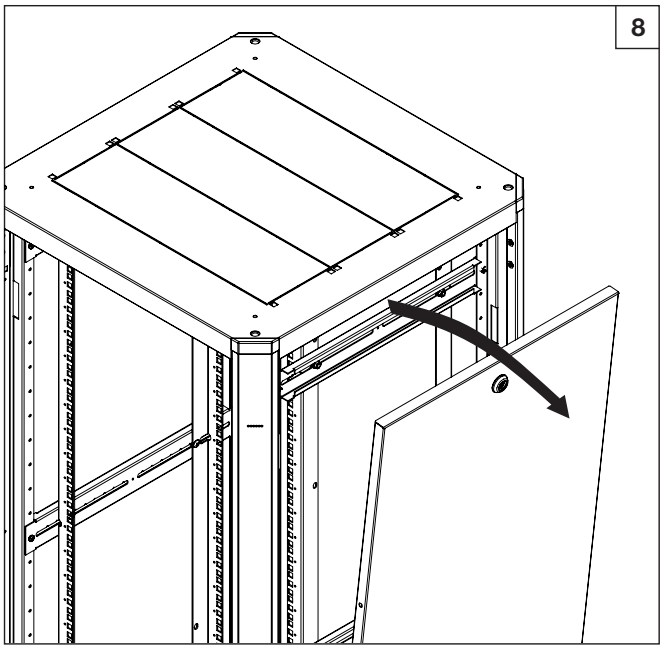

9

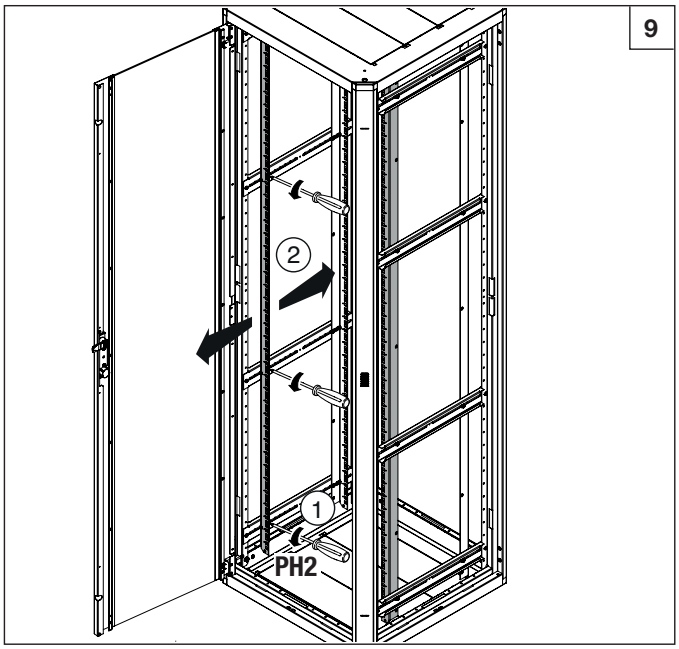

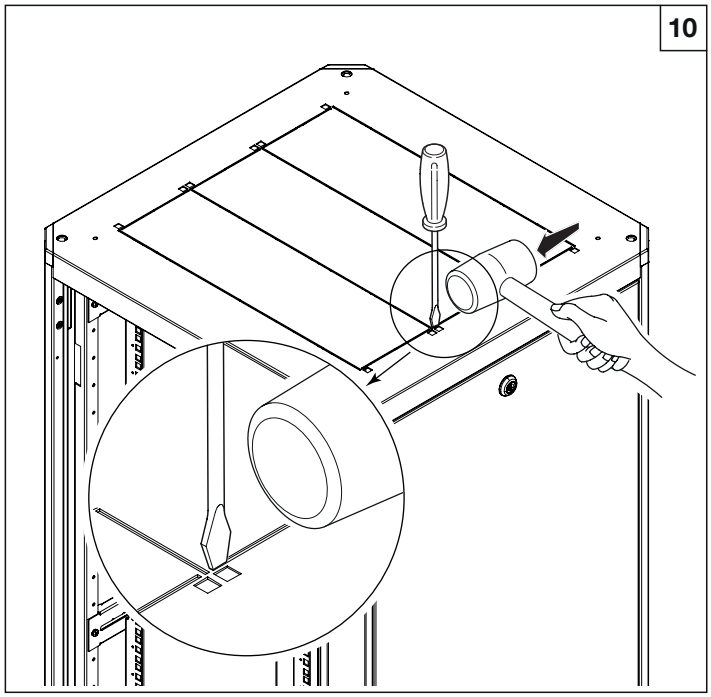

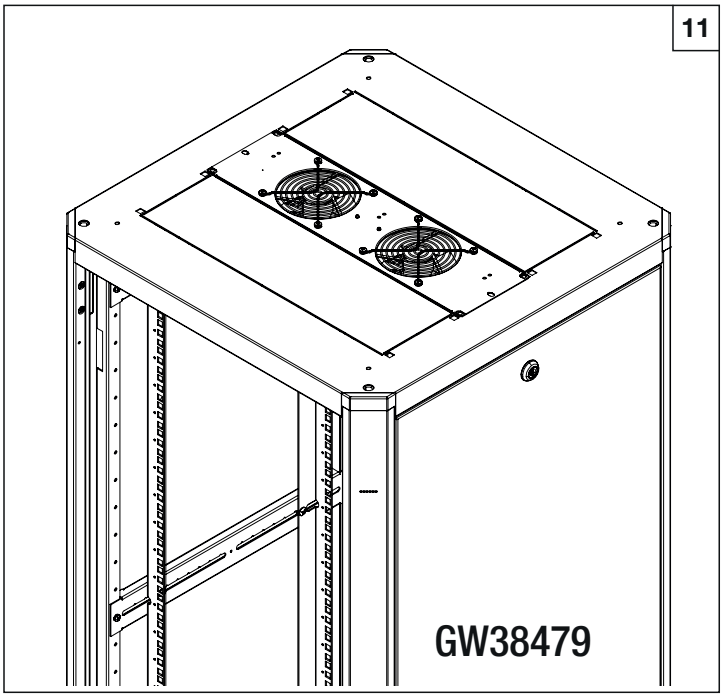

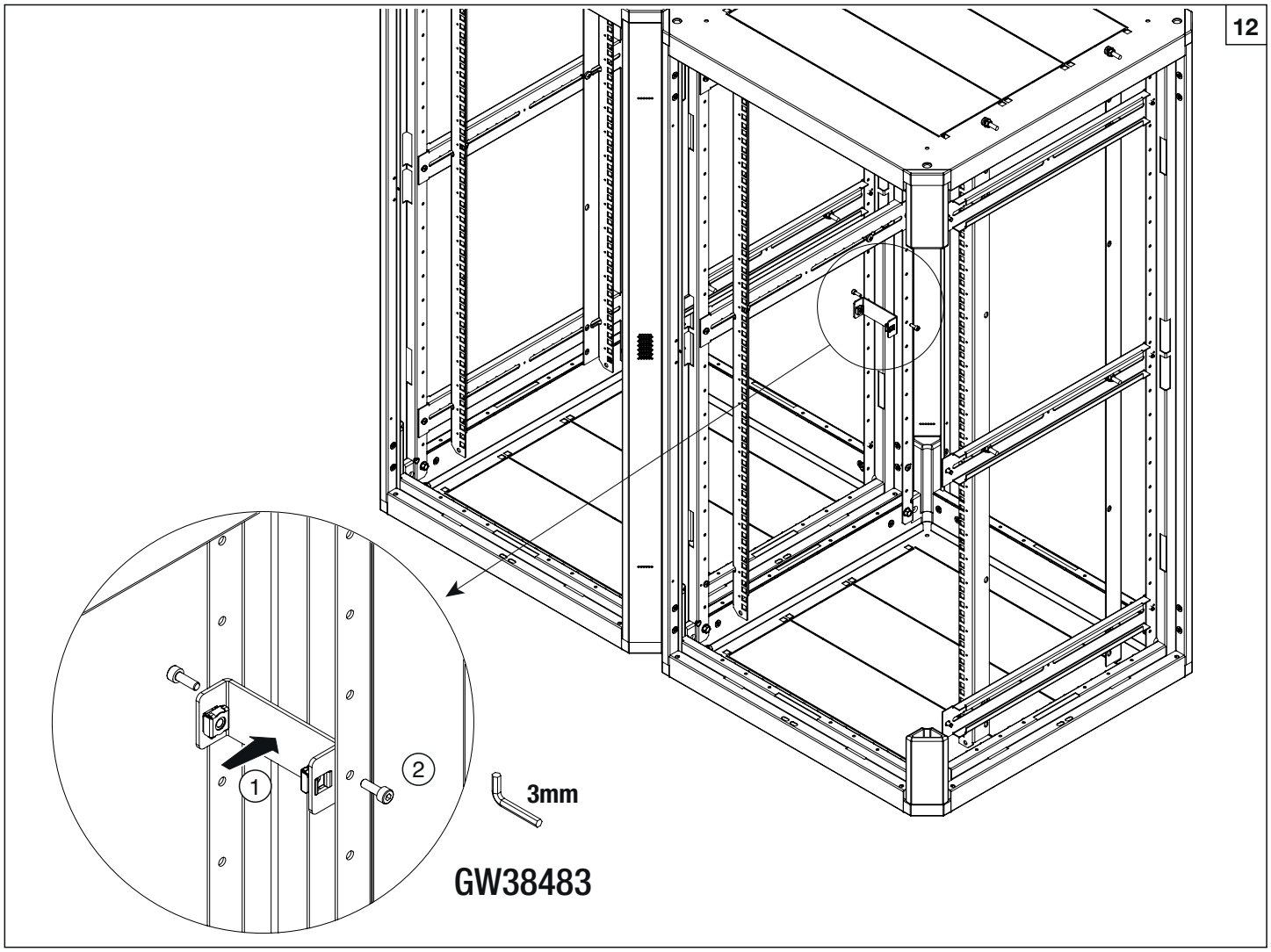

75743302

Punto di contatto indicato in adempimento ai fini delle direttive e regolamenti UE applicabili:
Contact details according to the relevant European Directives and Regulations:
GEWISS S.p.A. Via D.Bosatelli, 1 IT-24069 Cenate Sotto (BG) Italy tel: +39 035 946 111 E-mail: qualitymarks@gewiss.com

According to applicable UK regulations, the company responsible for placing the goods in UK market is:
GEWISS UK LTD - Unity House, Compass Point Business Park, 9 Stocks Bridge Way, ST IVES Cambridgeshire, PE27 5JL, United Kingdom tel: +44 1954 712757 E-mail: gewiss-uk@gewiss.com

+39 035 946 111
8:30 - 12:30 / 14:00 - 18:00
lunedì - venerdì / monday - friday

www.gewiss.com

ULTIMA REVISIONE 01/2025