24 SC

GW 24 606
GW 24 616

GW 24 607
GW 24 617

GW 24 621	GW 24 622

1a

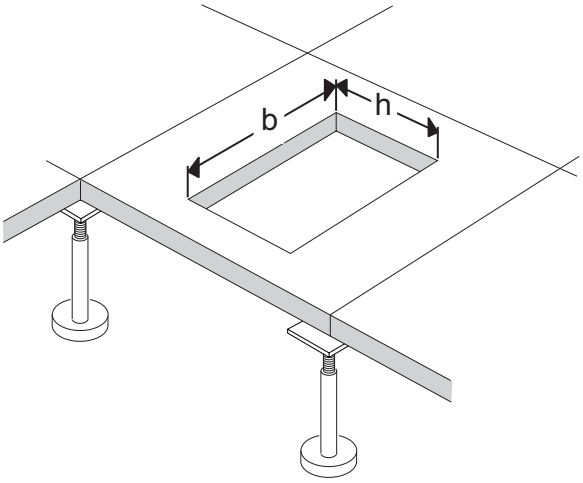

	b (mm)	h (mm)
GW 24 606 - GW 24 616	295	187
GW 24 607 - GW 24 617	295	340

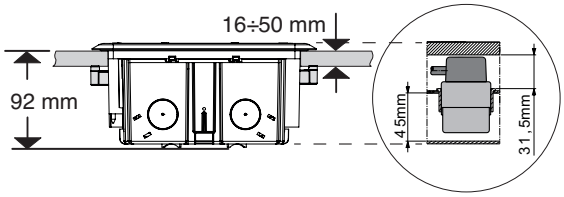

1b

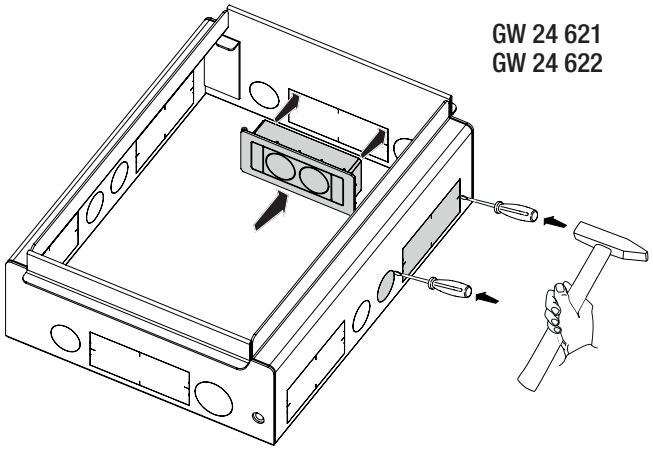

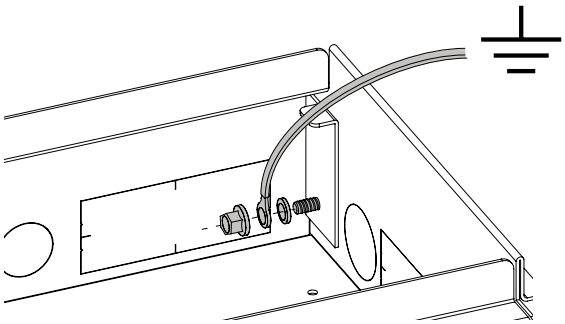

2

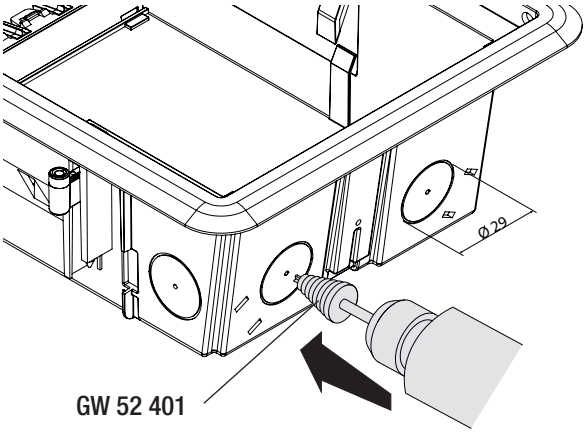

3a

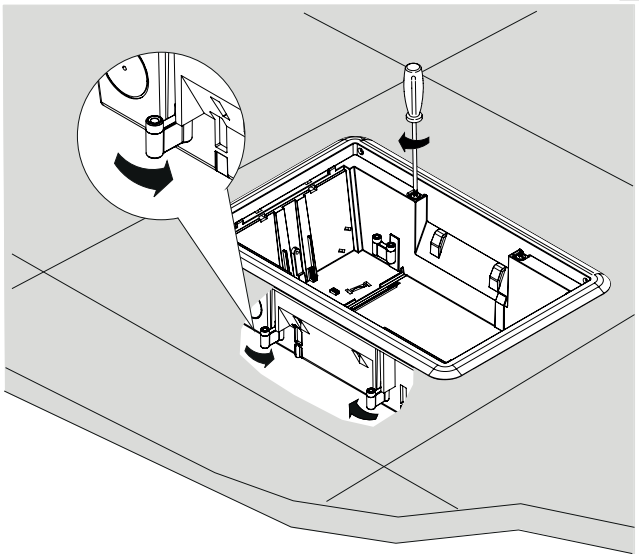

3b

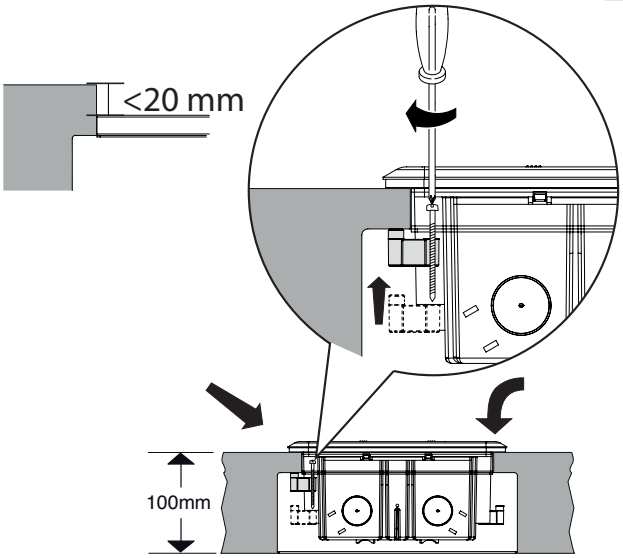

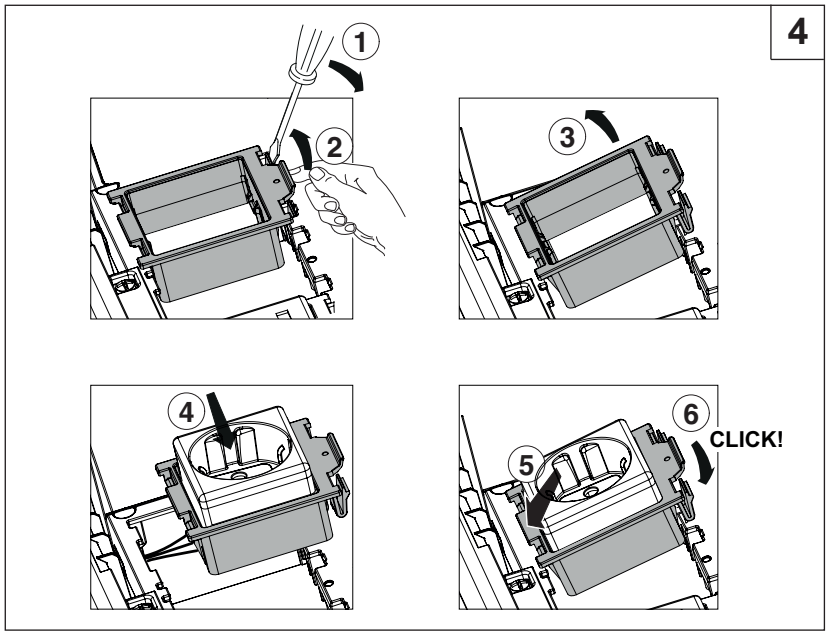
4
1
2
3
4
5
6
CLICK!

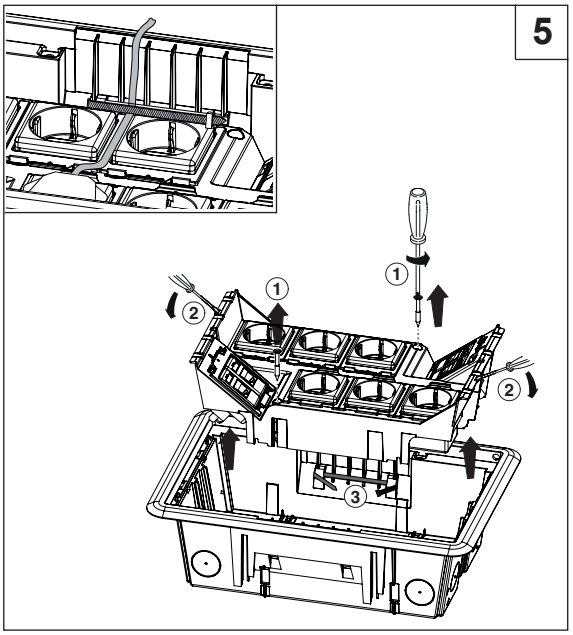
5
1
2
3

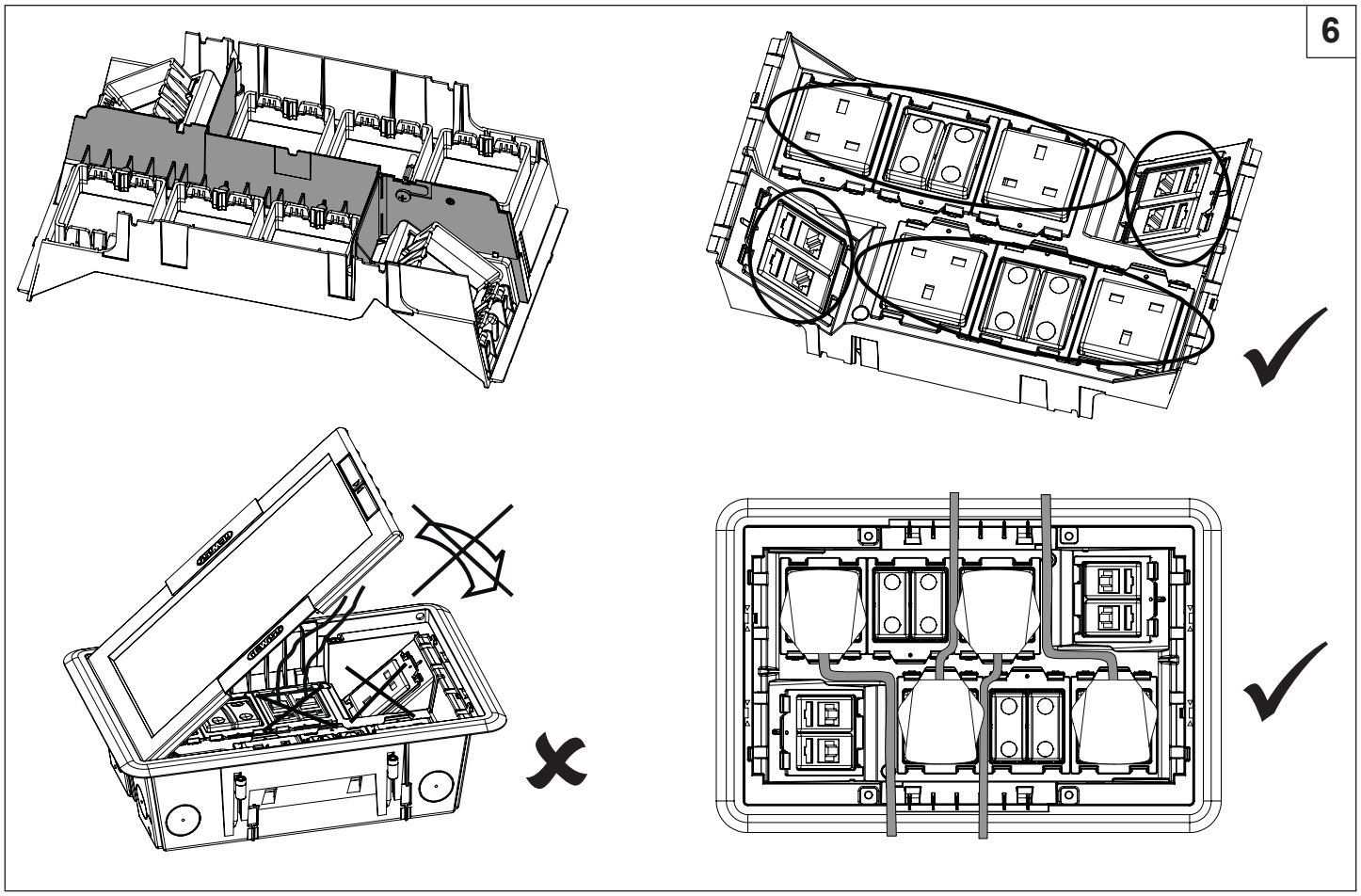
6

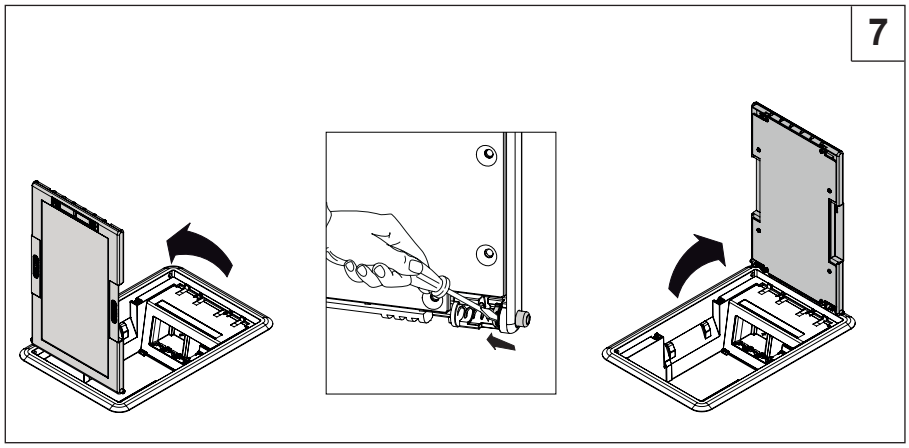
7

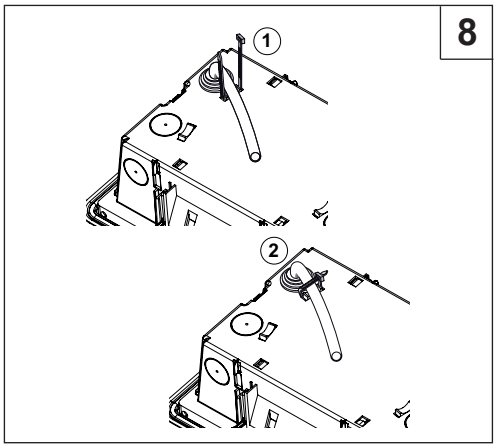
8
1
2

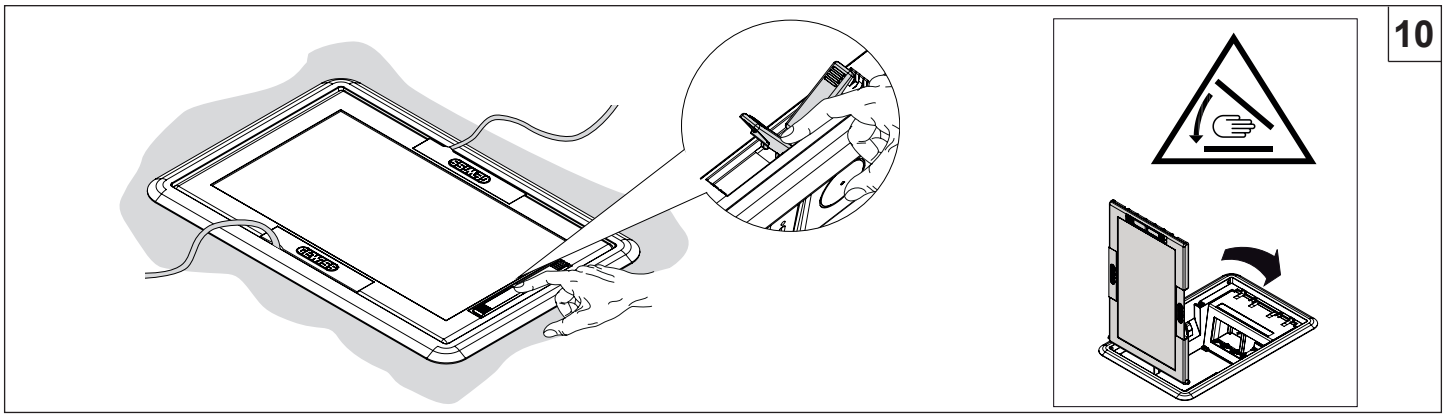

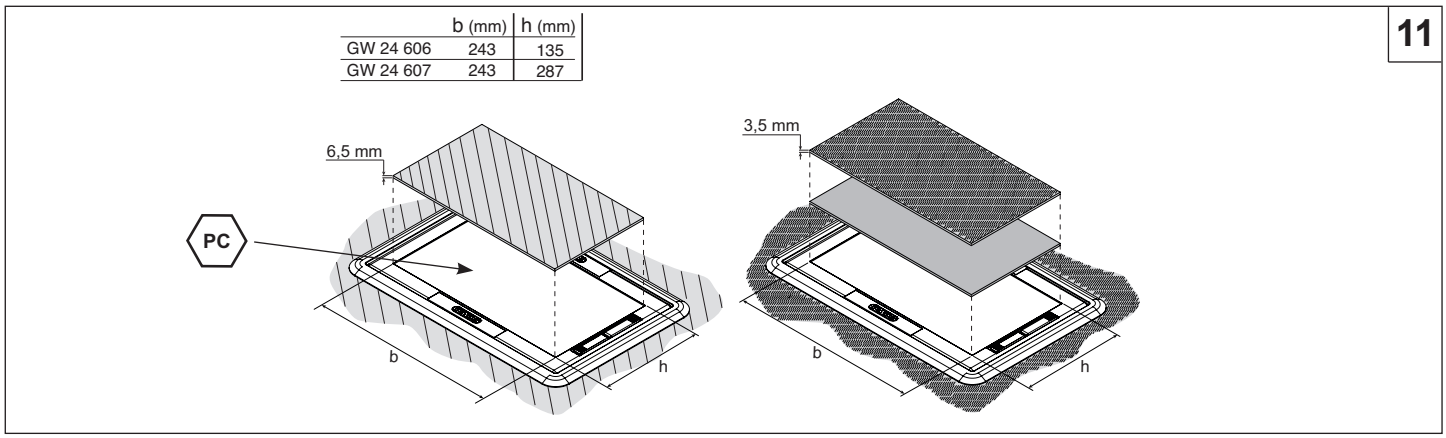

	b (mm)	h (mm)
GW 24 606	243	135
GW 24 607	243	287

GW 24 606 - GW 24 616			
1 x	8 x	4 x Ø 25 mm	2 x

GW 24 607 - GW 24 617			
2 x	16 x	8 x Ø 25 mm	2 x

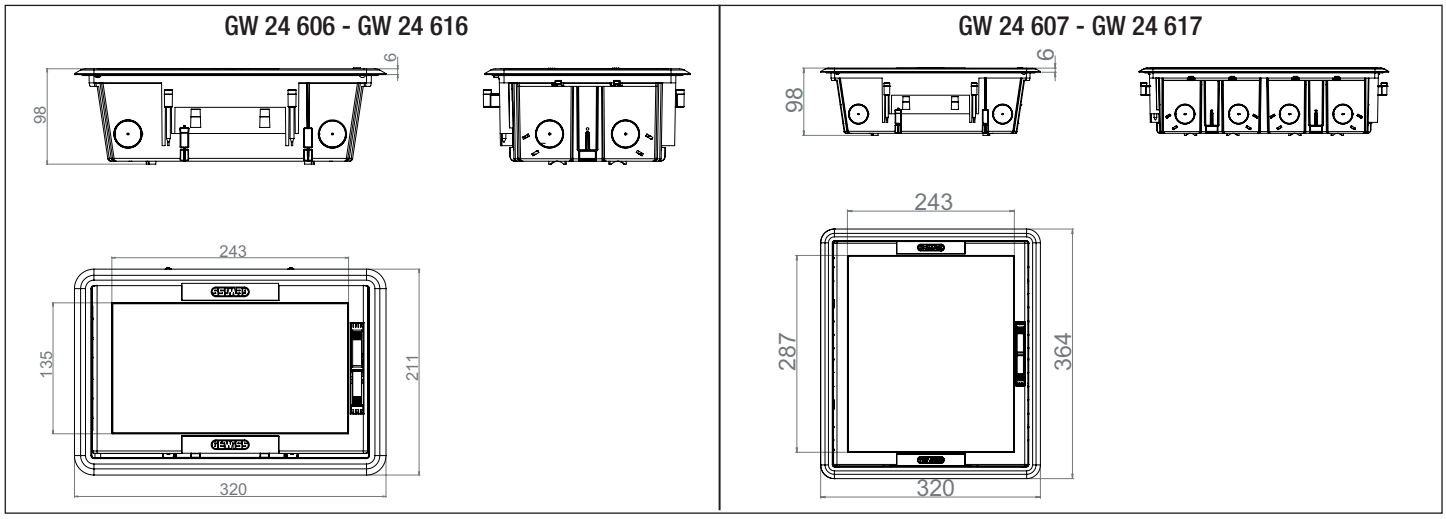

Punto di contatto indicato in adempimento ai fini delle direttive e regolamenti UE applicabili:
Contact details according to the relevant European Directives and Regulations:
GEWISS S.p.A. Via D.Bosatelli, 1 IT-24069 Cenate Sotto (BG) Italy tel: +39 035 946 111 E-mail: qualitymarks@gewiss.com

According to applicable UK regulations, the company responsible for placing the goods in UK market is:
GEWISS UK LTD - Unity House, Compass Point Business Park, 9 Stocks Bridge Way, ST IVES Cambridgeshire, PE27 5JL, United Kingdom tel: +44 1954 712757 E-mail: gewiss-uk@gewiss.com