Product Data Sheet

GW20518

SYSTEM WHITE - Domestic range



The System modular devices make it possible to create infinite combination between devices and plates, thanks to a complete range that is able to satisfy all design, functional and installation requirements. Colour and finiture: glossy white, bright and versatile The range includes commands, socket- outlets, protection, indicators, connectors and devices for the control, safety and comfort of your home.

Category	Push-button	Button key	With pull-cord
Symbol	-	Colour	White
Description	2P NO - 10 A	Voltage	250 V ac
Signalling unit	-	Standard	EN 60669-1
Resistance at test voltage	2000 V at 50 Hz for 1 minute	Insulation resistance	> 5 MOhm
Wiring terminals	With screw	Prolonged operation switch (no.of position changes)	40.000 at In 250 V ac cosφ=0.6
Thermo-pressure with ball	125 °C	Glow Wire Test	850 °C
Terminal grip on cable traction	> 50 N	Terminal tightening capacity stranded cables (mm²)	min. 0.75 - max. 2x4
Terminal tightening capacity solid cables (mm²)	min. 0.5 - max. 2x2.5	No. SYSTEM modules	1
Material	Technopolymer	Electrocod	0130

DIMENSIONAL

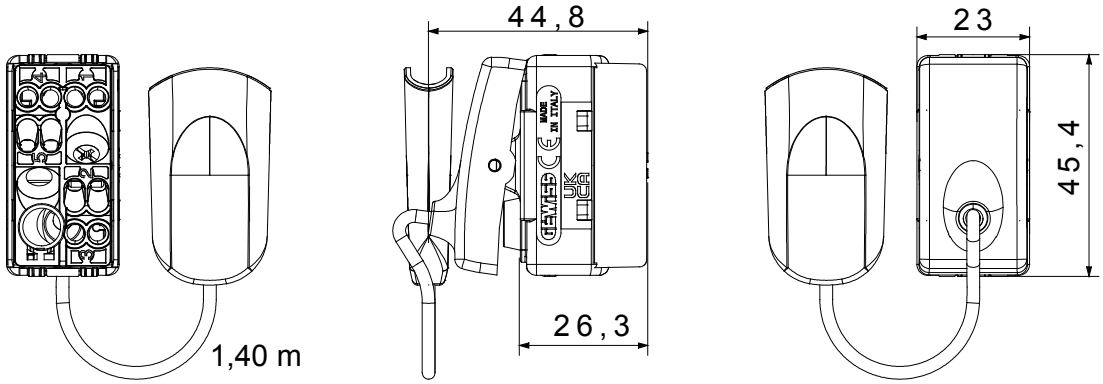

TECHNICAL SYMBOLOGY



STANDARDS/APPROVALS

GEWISS S.p.A. Via A. Volta, 1
24069 Cenate Sotto - Bergamo - Italy
tel. +39 035 94 61 11 fax +39 035 94 69 09
Company subject to the management and coordination of Polifin S.p.A.

www.gewiss.com
sat@gewiss.com
Last update 25/11/2026

Data, measures, designs and pictures are shown only as informative purposes, and could be changed without previous notice