Product Data Sheet
GW20246
90 AM Range



The System modular devices make it possible to create infinite combination between devices and plates, thanks to a complete range that is able to satisfy all design, functional and installation requirements. Colour and finiture: glossy white, bright and versatile Ideal for flush-mounting solutions (for rectangular or square boxes), surface-mounting solutions, and for special applications. The range includes commands, socket- outlets, protection, indicators, connectors and devices for the control, safety and comfort of your home.

Category	Power	Description	2P+E - 16 A dual amperage
Colour	White	Voltage	250 V ac
Earth pit	Side and central	Standard	Italian / German
Characteristics	With safety shields	For plug pins	Ø 4 / 4.8 / 5 mm
Wiring terminals	With screw	Type	P40
Standard	CEI 23-50 / IEC 60884-1	Resistance at test voltage	2000 V at 50 Hz for 1 minute
Prolonged operation switch (no.of position changes)	10.000 at In 250 V ac cosφ=0.8	Thermo-pressure with ball	125 °C
Glow Wire Test	850 °C	Terminal grip on cable traction	> 50 N
Terminal tightening capacity stranded cables (mm²)	min. 0.75 - max. 2x4	Terminal tightening capacity solid cables (mm²)	min. 0.5 - max. 2x2.5
No. SYSTEM modules	2	Material	Technopolymer
Electrocod	0131		

DIMENSIONAL

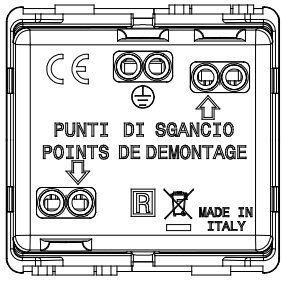

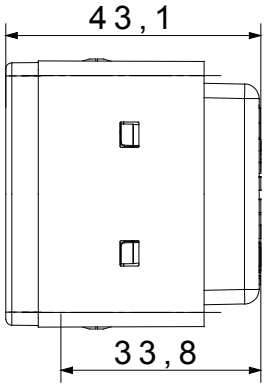

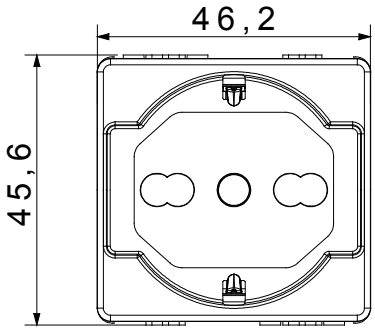

TECHNICAL SYMBOLOGY



GWT

125 °C 850 °C

STANDARDS/APPROVALS

GEWISS S.p.A. Via A. Volta, 1
24069 Cenate Sotto - Bergamo - Italy
tel. +39 035 94 61 11 fax +39 035 94 69 09
Company subject to the management and coordination of Polifin S.p.A.

www.gewiss.com
sat@gewiss.com
Last update 25/11/2026

Data, measures, designs and pictures are shown only as informative purposes, and could be changed without previous notice