Product Data Sheet
GW20216

SYSTEM WHITE - Domestic range



The System modular devices make it possible to create infinite combination between devices and plates, thanks to a complete range that is able to satisfy all design, functional and installation requirements. Colour and finiture: glossy white, bright and versatile Ideal for flush-mounting solutions (for rectangular or square boxes), surface-mounting solutions, and for special applications. The range includes commands, socket- outlets, protection, indicators, connectors and devices for the control, safety and comfort of your home.

Category	Socket-Outlet	Description	2P+E - 15 A - 250V ac
Colour	White	Voltage	250/125 V AC
Earth pit	-	Standard	USA
Characteristics	-	For plug pins	Flat
Wiring terminals	With screw	Standard	IEC 60884-1
Resistance at test voltage	2000 V at 50 Hz for 1 minute	Prolonged operation switch (no.of position changes)	10.000 at In 250 V ac cosφ=0.8
Thermo-pressure with ball	125 °C	Glow Wire Test	850 °C
Terminal grip on cable traction	> 50 N	Terminal tightening capacity stranded cables (mm²)	min. 0.75 - max. 2x4
Terminal tightening capacity solid cables (mm²)	min. 0.5 - max. 2x2.5	No. SYSTEM modules	1
Material	Technopolymer	Electrocod	0131

DIMENSIONAL

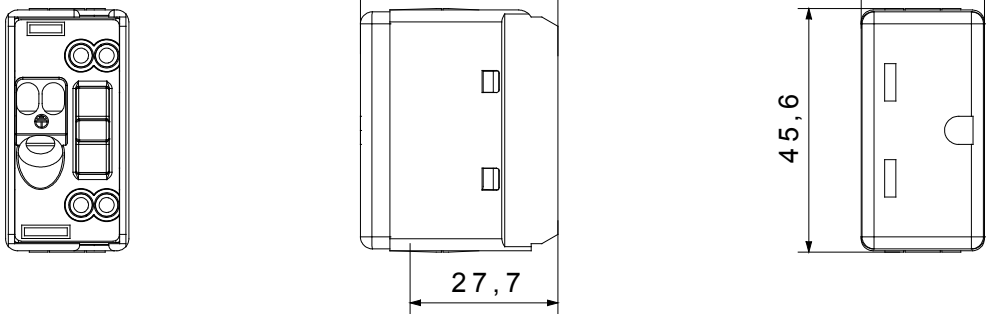

TECHNICAL SYMBOLOGY



STANDARDS/APPROVALS

CE Reach Declaration

GEWISS S.p.A. Via A. Volta, 1
24069 Cenate Sotto - Bergamo - Italy
tel. +39 035 94 61 11 fax +39 035 94 69 09
Company subject to the management and coordination of Polifin S.p.A.

www.gewiss.com
sat@gewiss.com
Last update 25/11/2026

Data, measures, designs and pictures are shown only as informative purposes, and could be changed without previous notice