Product Data Sheet
GW16022SCY

CHORUSMART - Domestic range



Smart plate can be used with Home Gateway for “CONNECTED SMART HOME” solutions. The EGO SMART plates integrate with the connected devices of the ChoruSmart system, they go beyond pure aesthetics and become an element of interaction with the user. The plates communicate with the other connected devices and, using RGB perimeter LED strips and a graphic display, can communicate operating statuses and any alarms detected by the smart functions that control the home to the user. The traditional EGO SMART and EGO plates can be used in the same system as they are designed to blend in perfectly.

Colour	Clay	Description	2 modules
For support codes	GW16821N, GW16822N	Power supply	Via one of the suitable connected devices installed within it or via dedicated power supply unit GWA1700
Standard	2014/35/EU, 2014/30/EU, 2011/65/EU + 2015/863, EN 62368-1, EN 55032, EN 55035, EN IEC 63000	Working temperature	-5 ÷ +45 °C
Relative humidity (non-condensative)	Max 93%	IP degree	IP20
Functions	System information/status with messages on the display and notifications by RGB LED strips.	Material	Painted technopolymer
Finishing	Opaque finish	Glow wire test	650 °C
Thermo-pressure with ball	70 °C	Family	EGO SMART
User interface	The plate is equipped with a dot-matrix display and RGB LED strips		

DIMENSIONAL

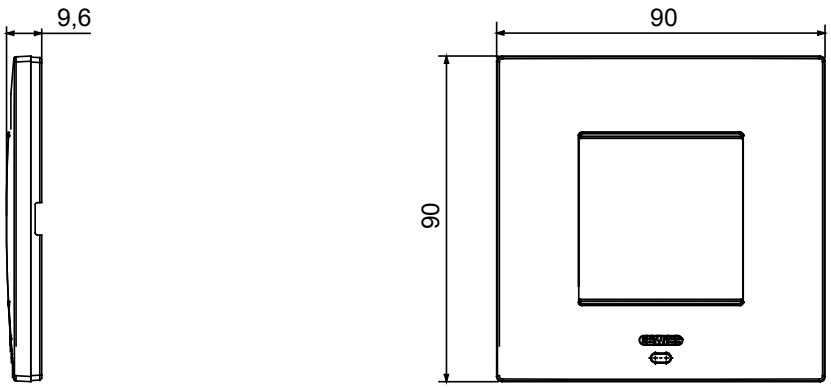

TECHNICAL SYMBOLOGY



STANDARDS/APPROVALS

GEWISS S.p.A. Via A. Volta, 1
24069 Cenate Sotto - Bergamo - Italy
tel. +39 035 94 61 11 fax +39 035 94 69 09
Company subject to the management and coordination of Polifin S.p.A.

www.gewiss.com
sat@gewiss.com
Last update 24/11/2026

Data, measures, designs and pictures are shown only as informative purposes, and could be changed without previous notice