Product Data Sheet
GW15856

Connected SMART HOME



Wireless connected device with Zigbee protocol from the ChoruSmart system that can be with Home Gateway for “CONNECTED SMART HOME” solutions, for residential and small offices, both for new builds and renovations. Zigbee technology is a secure and reliable technology in which data is encrypted and every node in the network ensures reachability across all devices (mesh network).

Colour	Satin white	Output contacts	1 NO 2 A (AC1) 240 V ac
Power supply	100 ÷ 240 V ac - 50/60 Hz	No. modules	1
No. output channels	1	Radio connections	Zigbee (IEEE 802.15.4)
Standard	2014/53/EU, 2011/65/EU + 2015/863, EN 60669-2-1, EN 60669-1, EN 301 489-1, EN 301 489-17, EN 300 328, EN IEC 63000	Working temperature	-5 ÷ +45 °C
Relative humidity (non-condensative)	Max 93%	Power output Zigbee	10 dBm
Wiring terminals	With screw	Terminal tightening capacity stranded cables (mm²)	Max. 1.5
Terminal tightening capacity solid cables (mm²)	Max. 1.5	Category	Movement detector
No. input channels	2 (for local command replication or sending additional Zigbee commands)	Input voltage	Mains supply voltage
IP degree	IP20	240 V ac Incandescent-halogen lamps	4 - 500 W
240 V ac LED lamps	4 - 100 W	Loads piloted from electronic transf. 240 V ac	4 - 250 VA
Technology	Infrared	Light sensor	1 - 1000 lux
Horizontal bearing angle	±50°	Vertical bearing angle	±8°

DIMENSIONAL

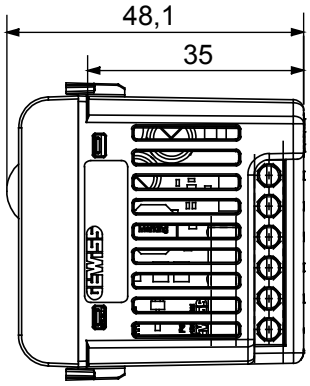

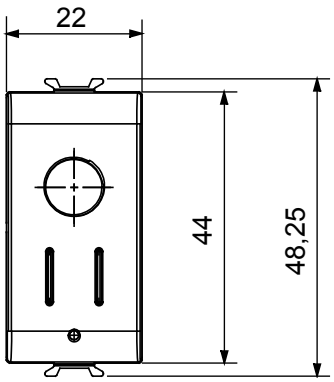

TECHNICAL SYMBOLOGY

IP

IP20

STANDARDS/APPROVALS

GEWISS S.p.A. Via A. Volta, 1
24069 Cenate Sotto - Bergamo - Italy
tel. +39 035 94 61 11 fax +39 035 94 69 09
Company subject to the management and coordination of Polifin S.p.A.

www.gewiss.com
sat@gewiss.com
Last update 28/11/2026

Data, measures, designs and pictures are shown only as informative purposes, and could be changed without previous notice