Product Data Sheet

GW15721

CHORUSMART - Domestic range

Wide range of control devices, sockets for power supply (conforming to national and international standards) signal pick-up, climate control, comfort management, technical alarm signalling and emergency lighting management. The ChoruSmart modular devices are available in five colours, glossy white, satin white, natural beige, satin black and lacquered titanium and in various sizes from 1/2, 1, 2 and 3 modules. Thanks to the mounting supports for rectangular, square and round boxes, endless combinations can be created with the ChoruSmart range of plates.

Category	Relay	Output contacts	10 AX 250 V ac
Type	Latching relay	Colour	Satin white
Description	Latching relay	No. of poles	1P
Voltage	230 V ac	Standard	EN 60669-1 / EN 60669-2-2
Frequency	50/60 Hz	Resistance at test voltage	2000 V at 50 Hz for 1 minute
Insulation resistance	> 5 MOhm	Wiring terminals	With screw
Prolonged operation switch (no.of position changes)	40.000 at In 250 V ac cosφ=0,6	Thermo-pressure with ball	125 °C
Glow Wire Test	850 °C	Terminal grip on cable traction	> 50 N
Terminal tightening capacity stranded cables (mm²)	1x4 / 2x2,5	Terminal tightening capacity solid cables (mm²)	2x2,5
No. modules	1	230V incandescent-halogen lamps	1000 W
Fluorescent lamps with electronic ballast	400 W	Fluorescent lamps with compensated ballast	360 W
CFL lamps	200 W	230V LED lamps	200 W
Halogen/LED lamps with electronic transformer	200 W	Halogen/LED lamps with electromechanical transformer	400 W
Material	Technopolymer	Electrocod	140

DIMENSIONAL

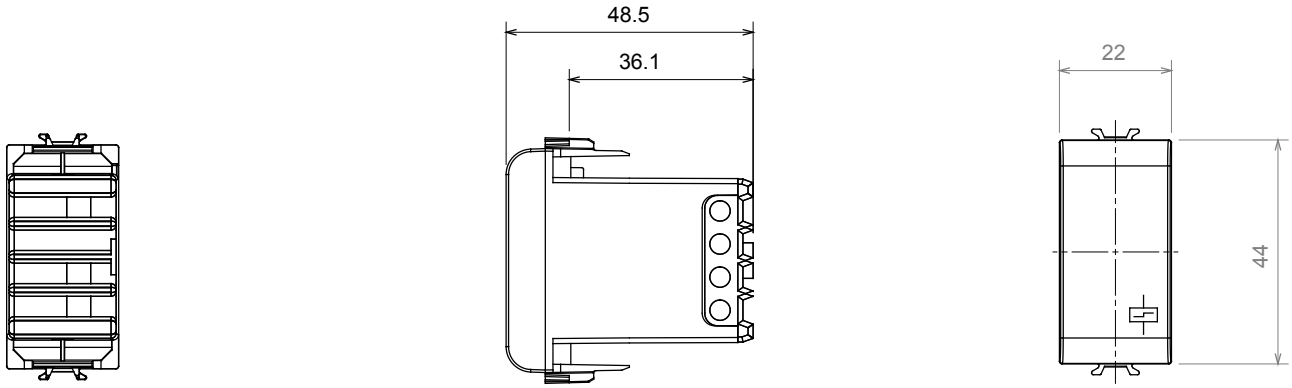

TECHNICAL SYMBOLOGY

125 °C 850 °C

STANDARDS/APPROVALS

UK CA

GEWISS S.p.A. Via A. Volta, 1
24069 Cenate Sotto - Bergamo - Italy
tel. +39 035 94 61 11 fax +39 035 94 69 09
Company subject to the management and coordination of Polifin S.p.A.

www.gewiss.com
sat@gewiss.com
Last update 30/04/2026

Data, measures, designs and pictures are shown only as informative purposes, and could be changed without previous notice