Product Data Sheet

GW15602

CHORUSMART - Domestic range



Wide range of control devices, sockets for power supply (conforming to national and international standards) signal pick-up, climate control, comfort management, technical alarm signalling and emergency lighting management. The ChoruSmart modular devices are available in five colours, glossy white, satin white, natural beige, satin black and lacquered titanium and in various sizes from 1/2, 1, 2 and 3 modules. Thanks to the mounting supports for rectangular, square and round boxes, endless combinations can be created with the ChoruSmart range of plates.

Category	Audible signalling	Description	Bell
Colour	Satin white	Supply voltage	230 V ac - 50 Hz
Thermo-pressure with ball	125 °C	Sound intensity	80 dB (at 1 m)
Glow Wire Test	850 °C	Max power consumption	8 VA
No. modules	1	Wiring terminals	With screw
Material	Technopolymer		

DIMENSIONAL

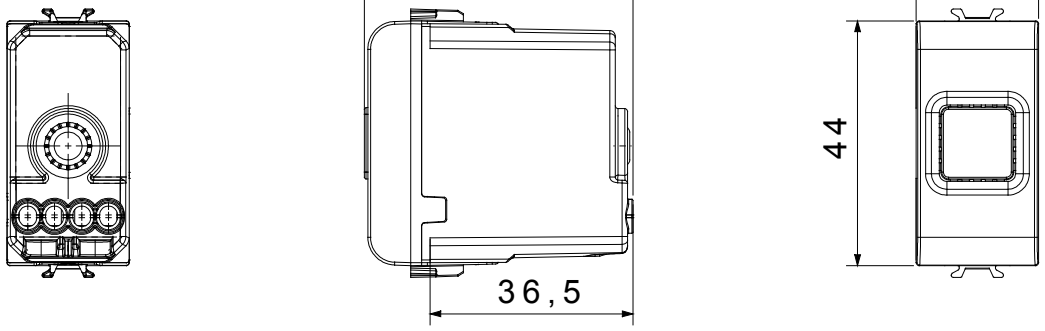

TECHNICAL SYMBOLOGY



STANDARDS/APPROVALS

CE

Reach Declaration

GEWISS S.p.A. Via A. Volta, 1
24069 Cenate Sotto - Bergamo - Italy
tel. +39 035 94 61 11 fax +39 035 94 69 09
Company subject to the management and coordination of Polifin S.p.A.

www.gewiss.com
sat@gewiss.com
Last update 25/11/2026

Data, measures, designs and pictures are shown only as informative purposes, and could be changed without previous notice