Product Data Sheet
GW14840
Connected SMART HOME



Wireless connected device with Zigbee protocol from the ChoruSmart system that can be with Home Gateway for “CONNECTED SMART HOME” solutions, for residential and small offices, both for new builds and renovations. Zigbee technology is a secure and reliable technology in which data is encrypted and every node in the network ensures reachability across all devices (mesh network).

Colour	Glossy Titanium	Description	Multiprotocol gateway
Power supply	100 ÷ 240 V ac - 50/60 Hz	No. modules	2
Radio connections	WiFi (IEEE 802.11 b/g/n), Zigbee (IEEE 802.15.4)	Configuration	Throught APP via Cloud
Standard	2014/35/EU, 2014/30/EU, 2014/53/EU, 2011/65/EU, EN 62368-1, EN 303 446-1, EN 301 489-1, EN 301 489-17, EN 55032, EN 55035, EN 300 328, EN 62479	Working temperature	-5 ÷ +45 °C
Relative humidity (non-condensative)	Max 93%	Power output Zigbee	10 dBm
Dispersible max power (W)	0.7	Wiring terminals	With screw
Terminal tightening capacity stranded cables (mm²)	Max. 1.5	Terminal tightening capacity solid cables (mm²)	Max. 1.5
IP degree	IP20		

DIMENSIONAL

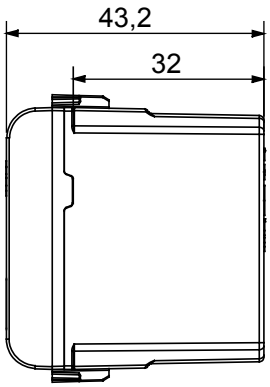

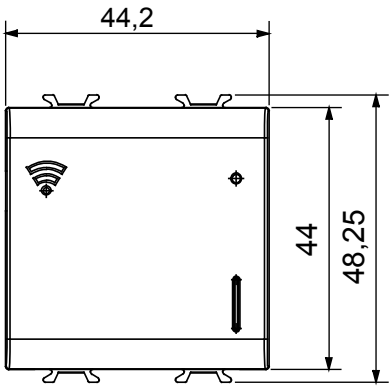

TECHNICAL SYMBOLOGY

IP

IP20

STANDARDS/APPROVALS

GEWISS S.p.A. Via A. Volta, 1
24069 Cenate Sotto - Bergamo - Italy
tel. +39 035 94 61 11 fax +39 035 94 69 09
Company subject to the management and coordination of Polifin S.p.A.

www.gewiss.com
sat@gewiss.com
Last update 24/11/2026

Data, measures, designs and pictures are shown only as informative purposes, and could be changed without previous notice