Product Data Sheet

GW14709

CHORUSMART - Domestic range



Wireless connected device with Zigbee protocol from the ChoruSmart system that can be with Home Gateway for “CONNECTED SMART HOME” solutions, for residential and small offices, both for new builds and renovations. Zigbee technology is a secure and reliable technology in which data is encrypted and every node in the network ensures reachability across all devices (mesh network).

Colour	Glossy Titanium	Output contacts	1NO/NC 5 A (AC1) 240 V ac
Power supply	100 ÷ 240 V ac - 50/60 Hz	No. modules	2
Radio connections	Zigbee (IEEE 802.15.4)	Standard	2014/53/EU, 2011/65/EU + 2015/863, EN 60730-1, EN 60730-2-7, EN 60730-2-9, EN 301 489-1, EN 301 489-17, EN 300 328, EN IEC 63000
Working temperature	-5 ÷ +45 °C	Relative humidity (non-condensative)	Max 93%
Power output Zigbee	10 dBm	Wiring terminals	With screw
Terminal tightening capacity stranded cables (mm²)	Max. 1.5	Terminal tightening capacity solid cables (mm²)	Max. 1.5
Category	Thermostat	IP degree	IP20
Measured sizes	Temperature, humidity	Functions	Heating and cooling control; algorithms for 2-way systems: two-point (On/Off) and proportional integral (PWM).
Type of display	LCD		

DIMENSIONAL

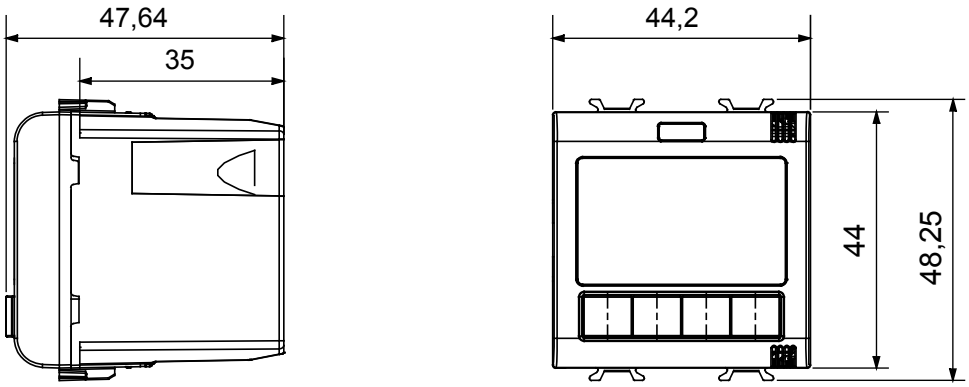

TECHNICAL SYMBOLOGY

IP

IP20

STANDARDS/APPROVALS

CE UKCA Reach Declaration

GEWISS S.p.A. Via A. Volta, 1
24069 Cenate Sotto - Bergamo - Italy
tel. +39 035 94 61 11 fax +39 035 94 69 09
Company subject to the management and coordination of Polifin S.p.A.

www.gewiss.com
sat@gewiss.com
Last update 23/11/2026

Data, measures, designs and pictures are shown only as informative purposes, and could be changed without previous notice