Product Data Sheet

GW52083

GW FIT Range

Systems of accessories for electrical installations used for residential, tertiary and industrial applications. The system consists of fasteners for pipes and cables, cable fittings, accessories for rigid pipes (RK Series) and flexible conduit (DF Series). The system include also a wide variety of cable ties (52FS Range) and terminal blocks (44 Range).

Colour	Grey RAL 7035	IP degree	IP54
Material	Nylon	For cables Ø (mm)	from 6 to 9
PG pitch	11	Mounting hole Ø (mm)	19
Description	Cable gland	Glow Wire Test	650 °C
Operating temperature	-25 +65 °C	Electrocod	36B
Standard	EN 50262 - IEC62444 - DIN 40430		

BEHAVIOUR WITH CHEMICAL AND ATMOSPHERIC AGENTS

Saline solution	Acids		Bases		Solvents				Mineral oil	UV rays
	Concentrated	Diluited	Concentrated	Diluited	Hexane	Benzol	Acetone	Ethyl alcohol		
Resistant	Limited resistance	Limited resistance	Resistant	Resistant	Resistant	Resistant	Resistant	Resistant	Resistant	Limited resistance

DIMENSIONAL

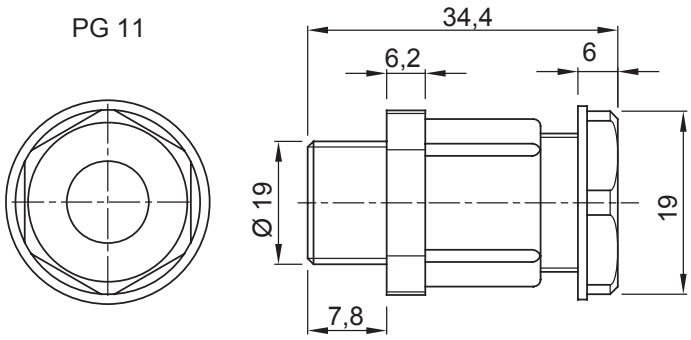

TECHNICAL SYMBOLOGY

IP54 650 °C -25 +65 °C

STANDARDS/APPROVALS

CE

GEWISS S.p.A. Via Domenico Bosatelli 1
24069 Cenate Sotto - Bergamo - Italy
tel. +39 035 94 61 11 fax +39 035 94 69 09

www.gewiss.com
sat@gewiss.com
Last update 23/04/2024

Data, measures, designs and pictures are shown only as informative purposes, and could be changed without previous notice