Product Data Sheet

GW67256N

Industrial-type socket-outlets conforming to IEC 309 Standard, with mechanical interlock consisting of a circuit breaker enabling the plug to be connected and disconnected only in the open position, and the switch to close only with the plug inserted. Wide range including models with rotary switch and fuseholder base, AUTOMATIKA with 6kA C characteristic miniature circuit breaker, and version with safety transformer. High application versatility thanks to the possibility of assembly in back-mounting and flush-mounting boxes, and boards of the 68 Q-DIN and Q-MC ranges.

Type	Vertical	Thermo-pressure with ball	125 °C (IB socket) - 80 °C (bottom)
IP degree	IP67	No. of poles	2P+E
Mechanical resistance	IK08	Frequency	50/60 Hz
Operating temperature	-25 +40 °C	Protection	NO (SBF)
With back-mounting box	Yes	Electrocod	2222
Glow wire test	850 °C (IB socket) - 650 °C (bottom)	Colour	Yellow
IB socket outlet rated current (In)	63 A	Rated current (A)	63
Reference h	4	Rated voltage	100 - 130 V

DIMENSIONAL

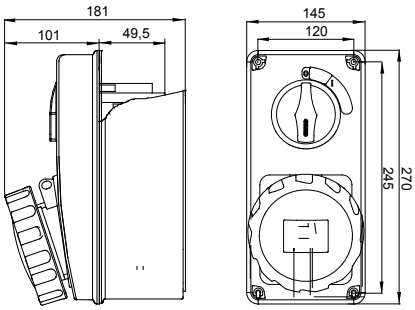

TECHNICAL SYMBOLOGY

125 °C (IB socket) - 80 °C (bottom)

IP IP67

IK IK08

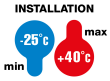

-25 +40 °C

GWT 850 °C (IB socket) - 650 °C (bottom)

STANDARDS/APPROVALS

Reach Declaration

GEWISS S.p.A. Via A. Volta, 1
24069 Cenate Sotto - Bergamo - Italy
tel. +39 035 94 61 11 fax +39 035 94 69 09
Company subject to the management and coordination of Polifin S.p.A.

www.gewiss.com
sat@gewiss.com
Last update 29/10/2026

Data, measures, designs and pictures are shown only as informative purposes, and could be changed without previous notice