Product Data Sheet

GW66337N

Industrial-type socket-outlets conforming to IEC 309 Standard, with mechanical interlock consisting of a circuit breaker enabling the plug to be connected and disconnected only in the open position, and the switch to close only with the plug inserted. Wide range including models with rotary switch and fuseholder base, AUTOMATIKA with 6kA C characteristic miniature circuit breaker, and version with safety transformer. High application versatility thanks to the possibility of assembly in back-mounting and flush-mounting boxes, and boards of the 68 Q-DIN and Q-MC ranges.

Type of fuse	Ø 10.3x38 mm	Type	Vertical
Fuse breacking capacity	> 50 kA	Thermo-pressure with ball	125 °C
Rated insulation voltage (Ui)	500 V	IP degree	IP67
No. of poles	2P+E	Mechanical resistance	IK08
Frequency	50/60 Hz	Operating temperature	-25 +40 °C
Protection	Fuse-holder base (CBF)	With back-mounting box	No
Electrocod	2222	Glow wire test	850 °C
Colour	Blue	Breaking capacity (Icc)	10 kA
Weight	Max. 0.9 Kg	IB socket outlet rated current (In)	30 A
Rated impulse withstand voltage (Uimp)	4 kV	Rated current (A)	32
Reference h	6	Rated voltage	200 - 250 V

DIMENSIONAL

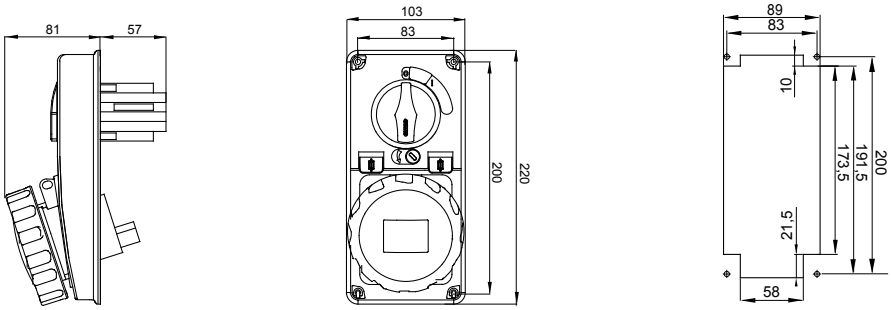

TECHNICAL SYMBOLOGY

125 °C

IP IP67

IK IK08

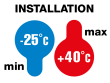

-25 +40 °C

GWT 850 °C

STANDARDS/APPROVALS

GEWISS S.p.A. Via A. Volta, 1
24069 Cenate Sotto - Bergamo - Italy
tel. +39 035 94 61 11 fax +39 035 94 69 09
Company subject to the management and coordination of Polifin S.p.A.

www.gewiss.com
sat@gewiss.com
Last update 29/10/2026

Data, measures, designs and pictures are shown only as informative purposes, and could be changed without previous notice