Product Data Sheet

GWJ3001A

JOINON range

I-CON wallboxes are JOINON solutions designed to integrate into private and semi-public scenarios in compliance with the international standard IEC 61851-1 ed. 3. They feature an elegant and compact design, special "one-hand charge" functionality and the presence of a vandal-proof socket, IP55 degree combined with IK10-certified mechanical resistance, full connectivity to support the dedicated JOINON App for a complete and easy charging control, intelligent load management and energy produced by any photovoltaic panels (also in Master/Slave mode), and different installation options: wall, recessed or floor.

INPUT	-	Socket/Connector Nr. (Type)	1 (Type 2 socket, with shutters)
Terminal blocks	3 x 10 mm²	Charging activation	Free access
Rated current	20 A	Human Interface	RGB Led
Total power	4.6 Kilowatt	Connectivity	No
OUTPUT	-	**MECHANICAL FACTS**	-
Rated voltage	230 V	Mounting and installation	Wall mounting (floor mounting with support)
Current supplied (max)	20 A	Colour	Dark grey
Maximum current	4.6 Kilowatt	Material	Thermoplastic (Post-industrial origin)
Thermal-magnetic protection	Currently not present	External treatments	No
Type of residual current protection	Currently not present	IP degree	IP55
Power meter	Currently not present	Mechanical resistance	IK10
DC Leakage check	Yes	Operating temperature	-25 +50 °C
(Auto)restart electrical protections	Currently not present	Customizations	Yes (front)

DIMENSIONAL

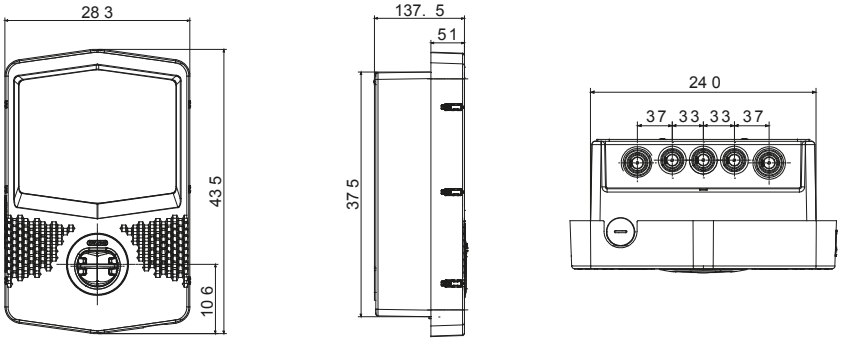

TECHNICAL SYMBOLOGY

IP IP55

IK IK10

STANDARDS/APPROVALS

Reach Declaration

CE

GEWISS S.p.A. Via Domenico Bosatelli 1
24069 Cenate Sotto - Bergamo - Italy
tel. +39 035 94 61 11 fax +39 035 94 69 09

www.gewiss.com
sat@gewiss.com
Last update 12/10/2024

Data, measures, designs and pictures are shown only as informative purposes, and could be changed without previous notice