Product Data Sheet

GWS3118T57K

On request

Smart [3] is a watertight fixture IP66/69 with Flip Type LED without wire bording, available in 3000K,4000K,5700K, with CRI ≥80. IK08 body in RAL7035 colored self-exhausting polycarbonate, for industrial applications and ideal for production areas, warehouses, logistics areas and design to replace fluorescent devices and lowbay up to 6,500lm. Available in sizes 800, 1200, 1600mm, powers from 18W to 58W, flux range from 1.700lm to 6.500lm, with integrated Power On/Off or DALI and 2 different optical solutions UV-stabilized self-extinguishing polycarbonate, in opal or trasparent finish. The version with passing wiring has mechanical and electrical connection components prewired, with up to 25 fixtures installed in a continuous row. The device can be hung or wall mounted and is available a GW bracket accessories with a tilt of 30° or 45° on the vertical axis. Available also with an emergency kit version.

Application	Internal	Series	SMART [3]
Type	Stand alone	IP degree	IP66/IP69
Mechanical resistance	IK08	Insulation class	II
Glow Wire Test	850 °C	Length	800 mm
Device with reduced surface temperature	Compliant	Shield type	Transparent
Operating temperature	-30°C ÷ +50 °C	Weight (kg)	1.5
Voltage	220/240 V - 50/60 Hz - Stand alone	Lamp	LED
Driver type	Constant Current Driver Led	System power	15 W
Type of light source	LED - Not replaceable	Colour temperature	5700 K (CRI>80)
Efficiency class of integrated LEDs	A ÷ A++	Nominal flux (lm)	2100
Lumen output (lm)	1700	LED Life Time (L80B50)	100000 h
LED Life Time (L90B50)	50000 h	LED LifeTime (L80B20)	85000 h
Failure rate apparecchio (35.000h, Tq=35° C)	<2,5%	Failure rate apparecchio (50.000h, Tq=25° C)	<2,5%
Warranty	5 years	Overvoltage resistance	Common mode: 2KV; Differential mode: 1KV
Electrocod	2434		

DIMENSIONAL

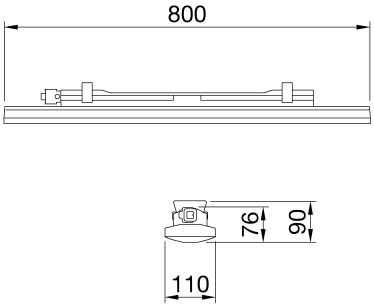

PHOTOMETRIC DISTRIBUTION

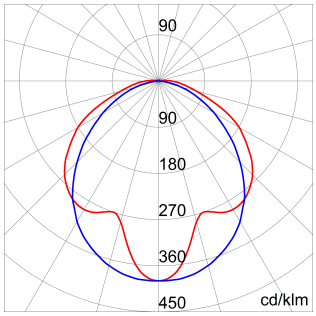

TECHNICAL SYMBOLOGY

IP
IP66/IP69

IK
IK08

GWT
850 °C

CONSTANT CURRENT DRIVER

5 YEARS WARRANTY

STANDARDS/APPROVALS

Reach Declaration

03

UK CA CE

Data, measures, designs and pictures are for information purpose only, last update 12/10/2024. They can be changed at any moment, therefore it is always ecommended to read the last updated version published on the website www.gewiss.com.Lumen output and system power are subject to a tolerance of +/- 10%. Unless stated otherwise, the values apply to an ambient temperature of 25°C. Terms of warranty at https://www.gewiss.com/it/en/company/landingpage/led-warranty. - 1 of 1