Product Data Sheet

GW85241S

On request

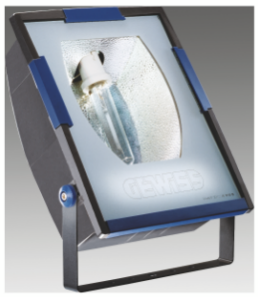

Thermoplastic outdoor floodlight in smoke grey color with hot galvanized bracket painted teh same color of the body. Equipped with graduate scale to facilitate orientation. Flat tempered glass 4 mm thickness silk screen printed; hinged to the body for quick access inside the floodlight. Anti-aging silicone gasket. Power input through PG 13,5 for cables Ø 6.5 ÷13 mm. Optic in 99.85% polished and anodised aluminium. Electrical componenent plate in galvanized steel. Bipolar terminal block for cable 4 mm².

Application	External	IP degree	IP65
Mechanical resistance	IK09	Insulation class	II
Glow Wire Test	650 °C	Maximum surface exposed to the wind	0.235 m²
Minimum distance from the illuminated object	1 m	Weight (kg)	9.8
Colour	Smoke grey	Voltage	230 V - 50 Hz
Lamp power	150 W	Lamp current	1.8 A
Lamp holder	E40	Lamp supplied	ST
Lamp included	Yes	Efficiency class of the lamp supplied	A+
Efficiency class of compatible lamps	A+	Optic	Street
Light pollution	0 cd/Klm	Warranty	5 years
Electrocod	2443		

DIMENSIONAL

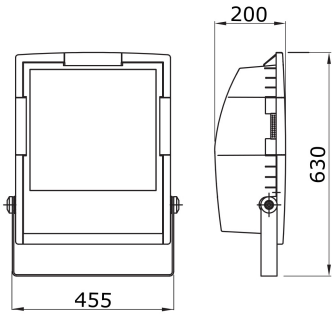

PHOTOMETRIC DISTRIBUTION

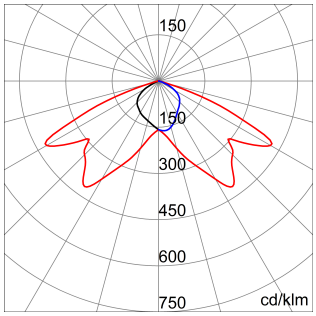

TECHNICAL SYMBOLOGY

IP
IP65

IK
IK09

GWT
650 °C

0.235 m²

1 m

STANDARDS/APPROVALS

CE

Data, measures, designs and pictures are for information purpose only, last update 12/10/2024. They can be changed at any moment, therefore it is always ecommended to read the last updated version published on the website www.gewiss.com.Lumen output and system power are subject to a tolerance of +/- 10%. Unless stated otherwise, the values apply to an ambient temperature of 25°C. Terms of warranty at https://www.gewiss.com/it/en/company/landingpage/led-warranty. - 1 of 1