Product Data Sheet

GW84031S

On request

Floodlight in die cast aluminum with galvanized bracket and painted the same color as the body. Equipped with graduate scale to facilitate orientation. Flat tempered glass 4 mm thickness silk screen printed; hinged to the body for quick access inside the Floodlight. Anti aging silicone gasket. Power input through PG13.5 for cables Ø 6.5 ÷ 13 mm. Optic in 99.85% polished and anodised aluminium. Electrical componenent plate in galvanized steel. Quick wiring tripolar terminal block.

Application	Indoor / Outdoor	IP degree	IP66
Mechanical resistance	IK07	Insulation class	I
Maximum surface exposed to the wind	0.103 m²	Lateral surface exposed to the wind	0.034 m²
Minimum distance from the illuminated object	1 m	Weight (kg)	5.6
Colour	Graphite grey	Voltage	230 V - 50 Hz
Lamp power	70 W	Lamp current	1 A
Lamp holder	RX7s	Lamp supplied	SD
Lamp included	Yes	Efficiency class of the lamp supplied	A+
Efficiency class of compatible lamps	A+	Optic	Asymmetrical - ULOR: 0%
Electrocod	2433		

DIMENSIONAL

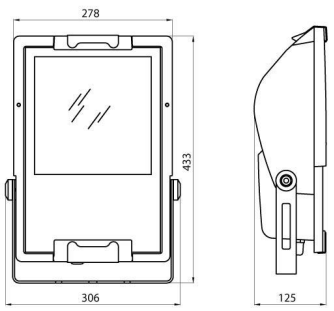

PHOTOMETRIC DISTRIBUTION

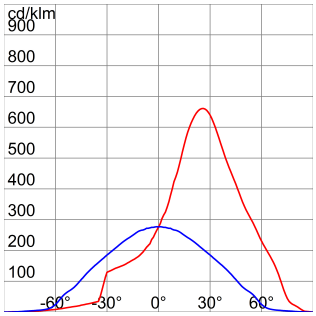

TECHNICAL SYMBOLOGY

IP66 IK07 0.103 m² 1 m

STANDARDS/APPROVALS

CE

Data, measures, designs and pictures are for information purpose only, last update 12/10/2024. They can be changed at any moment, therefore it is always ecommended to read the last updated version published on the website www.gewiss.com.Lumen output and system power are subject to a tolerance of +/- 10%. Unless stated otherwise, the values apply to an ambient temperature of 25°C. Terms of warranty at https://www.gewiss.com/it/en/company/landingpage/led-warranty. - 1 of 1