Product Data Sheet

GW52205

GW FIT Range

Outdoor cable ties, made in PA12, are indicated to fix devices and cables also in presence of low temperature. From sizes 9x265 mm are availble ties with double heads that increase the tensile stress resistance.

Colour	Black	Dimensions LxH (mm)	9x265
Material	Polyamide 12	Tensile stress (daN)	50
Terminal grip capacity Ø	26-60 mm	Number of heads	2
Glow Wire Test	650 °C	Type	L.T.R.
Type of material	Halogen-free in compliance with EN 60754-2	Electrocod	3640
Dielectric rigidity	28 kV/mm	Standard	EN 62775
Flame resistance in compliance with UL 94	HB	Oxygen limit index	22,5%
Humidity absorbed	<= 1%	Installation temperature	-25 +60 °C
Service temperature range	-45 °C +85 °C (max.peaks 120 °C)		

BEHAVIOUR WITH CHEMICAL AND ATMOSPHERIC AGENTS

Saline solution	Acids		Bases		Solvents				Mineral oil	UV rays
	Concentrated	Diluited	Concentrated	Diluited	Hexane	Benzol	Acetone	Ethyl alcohol		
Resistant	Limited resistance	Limited resistance	Limited resistance	Resistant	Resistant	Resistant	Resistant	Resistant	Resistant	Resistant

DIMENSIONAL

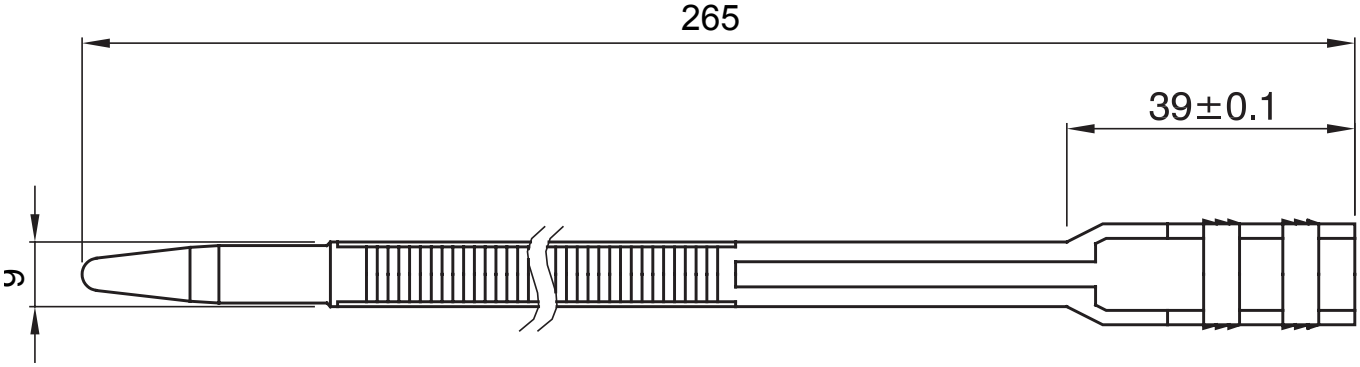

TECHNICAL SYMBOLOGY

GWT

650 °C

HF HALOGEN FREE

Halogen-free in compliance with EN 60754-2

STANDARDS/APPROVALS

CE

GEWISS S.p.A. Via Domenico Bosatelli 1
24069 Cenate Sotto - Bergamo - Italy
tel. +39 035 94 61 11 fax +39 035 94 69 09

www.gewiss.com
sat@gewiss.com
Last update 29/04/2024

Data, measures, designs and pictures are shown only as informative purposes, and could be changed without previous notice