Product Data Sheet

GW50708

GW FIT Range

Systems of accessories for electrical installations used for residential, tertiary and industrial applications. The system consists of fasteners for pipes and cables, cable fittings, accessories for rigid pipes (RK Series) and flexible conduit (DF Series). The system include also a wide variety of cable ties (52FS Range) and terminal blocks (44 Range).

Colour	Grey RAL 7035	Fixing	Clip
Glow Wire Test	750 °C	Ø wall plug (mm)	6
For external conduits (mm)	25	Type	With wall plug
Operating temperature	-5 +60 °C	Electrocod	21221
Standard	EN 61386-1 (when applicable)		

DIMENSIONAL

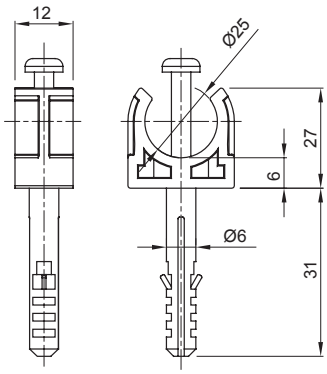

TECHNICAL SYMBOLOGY

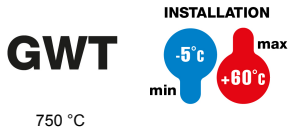

750 °C

STANDARDS/APPROVALS

CE

GEWISS S.p.A. Via Domenico Bosatelli 1
24069 Cenate Sotto - Bergamo - Italy
tel. +39 035 94 61 11 fax +39 035 94 69 09

www.gewiss.com
sat@gewiss.com
Last update 12/10/2024

Data, measures, designs and pictures are shown only as informative purposes, and could be changed without previous notice