# Product Data Sheet

## DX54512

GW FIT Range

Straight and revolving coupling device for sheath with IP54 protection degree.

| | | | |
|---|---|---|---|
| Colour | Black RAL 9005 | IP degree | IP54 |
| PG pitch | 11 | Sheath Ø (mm) | 12 |
| Type | Revolving | Electrocod | 210 |

## DIMENSIONAL

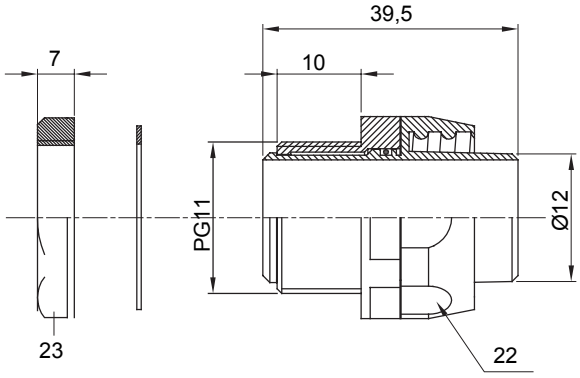


## TECHNICAL SYMBOLOGY

IP

IP54

## STANDARDS/APPROVALS

CE

GEWISS S.p.A. Via Domenico Bosatelli 1
24069 Cenate Sotto - Bergamo - Italy
tel. +39 035 94 61 11 fax +39 035 94 69 09

www.gewiss.com
sat@gewiss.com
Last update 12/10/2024

Data, measures, designs and pictures are shown only as informative purposes, and could be changed without previous notice