Product Data Sheet

DX54332

DF Range

Straight and revolving coupling device for sheath with IP54 protection degree.

Colour	Black RAL 9005	IP degree	IP54
GAS pitch	1 1/4"	Sheath Ø (mm)	32
Type	Revolving	Electrocod	210

DIMENSIONAL

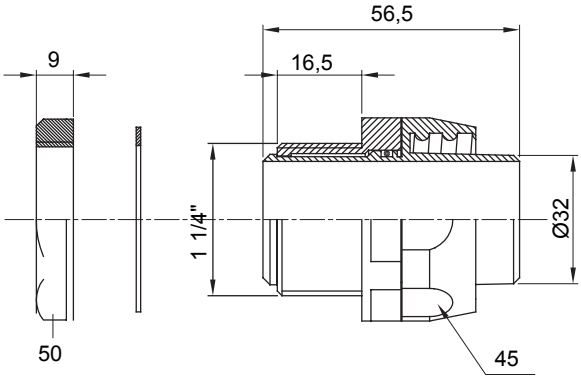

TECHNICAL SYMBOLOGY

IP

IP54

STANDARDS/APPROVALS

CE

GEWISS S.p.A. Via Domenico Bosatelli 1
24069 Cenate Sotto - Bergamo - Italy
tel. +39 035 94 61 11 fax +39 035 94 69 09

www.gewiss.com
sat@gewiss.com
Last update 12/10/2024

Data, measures, designs and pictures are shown only as informative purposes, and could be changed without previous notice