Product Data Sheet

DX52163

FK Range

-

Colour	Grey RAL 7035	Material	PP
Conduits Ø (mm)	63	Electrocod	210

DIMENSIONAL

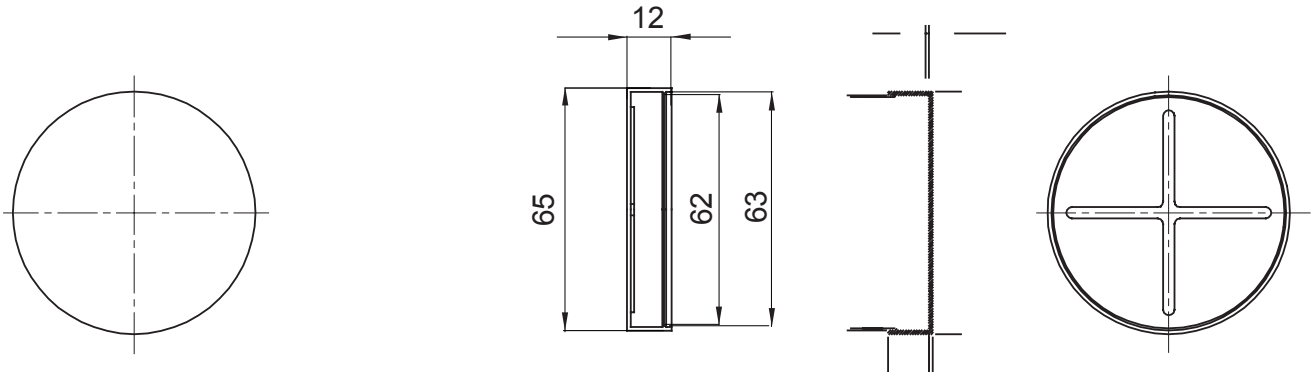

STANDARDS/APPROVALS

CE

GEWISS S.p.A. Via Domenico Bosatelli 1
24069 Cenate Sotto - Bergamo - Italy
tel. +39 035 94 61 11 fax +39 035 94 69 09

www.gewiss.com
sat@gewiss.com
Last update 27/04/2024

Data, measures, designs and pictures are shown only as informative purposes, and could be changed without previous notice