Product Data Sheet

DX47001

RK Range

Routing components for rigid protective conduits with IP40 and IP67 protection degree.

Colour	Grey RAL 7035	Characteristics	-
Description	Box-box pipe-fitting	Electrocod	21221

DIMENSIONAL

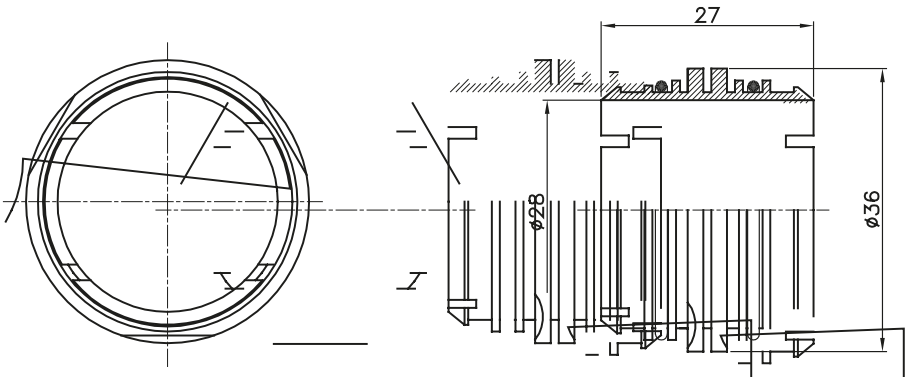

STANDARDS/APPROVALS

CE

GEWISS S.p.A. Via Domenico Bosatelli 1
24069 Cenate Sotto - Bergamo - Italy
tel. +39 035 94 61 11 fax +39 035 94 69 09

www.gewiss.com
sat@gewiss.com
Last update 12/10/2024

Data, measures, designs and pictures are shown only as informative purposes, and could be changed without previous notice