Product Data Sheet

GW44138

44 CE Range

Range 44 CE - Surface-mounting waterthight junction boxes in compilance with EN 60670-1 (CEI 23-48) and IEC 60670-22 (CEI 23-94) and made in high-performance technopolymers. The range includes versions with protection degree IP44, IP55, IP56 with smooth walls or with quick entry cable glands and different type of covers: blind / transparent, deep/plain, press-on/screw (in plastic, also 1/4 turn, or in metal). Available in different self-extinguishing materials (up to GWT 960 °C). Suitable for ordinary junctions, for special uses, and for industrial uses.

Insulation class	II (according to IEC 61140 standards)	Colour	Grey RAL 7035
IP degree	IP56	Material	Technopolymer GWPLAST 75
Mechanical resistance	IK08	Effective height of bottom	100 mm
Internal dim. LxHxD (mm)	240x190x130	Max Ø holes possible	54 mm
Lid screws (no. and type)	4 insul. sealable hinged	Application	Ordinary junctions
Glow Wire Test	650 °C	Lid colour	Transparent
Lid	Plain screwed	Operating temperature	-25 +60 °C
Type of material	Halogen-free in compliance with EN 60754-2	Electrocod	02210
Thermo-pressure with ball	85 °C	Torque screws tightening	1.8 Newton/meter
Type of bottom	High capacity	Walls	Smooth
Accessories for insulation restoring	GW44621, GW44622		

BEHAVIOUR WITH CHEMICAL AND ATMOSPHERIC AGENTS

Saline solution	Acids		Bases		Solvents				Mineral oil	UV rays
	Concentrated	Diluited	Concentrated	Diluited	Hexane	Benzol	Acetone	Alcohol		
Resistant	Limited resistance	Resistant	Resistant	Resistant	Limited resistance	Not resistant	Not resistant	Limited resistance	Limited resistance	Limited resistance

DIMENSIONAL

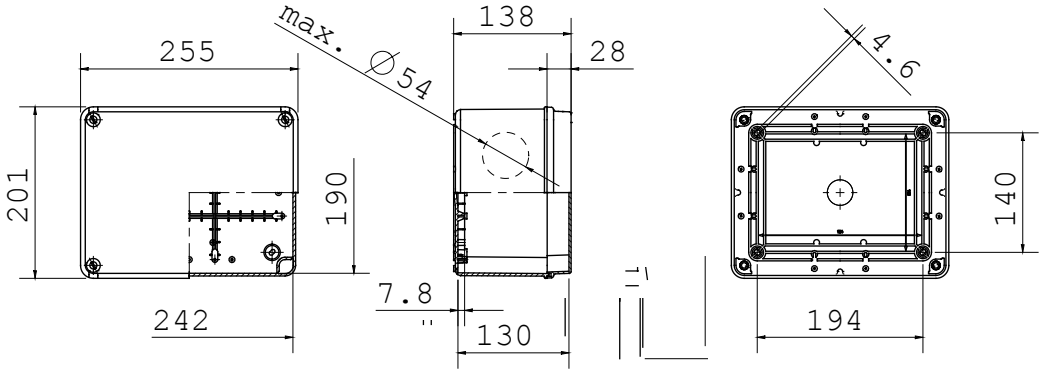

TECHNICAL SYMBOLOGY

II (according to IEC 61140 standards)	IP56	IK08	650 °C	-25 +60 °C	Halogen-free in compliance with EN 60754-2	85 °C

STANDARDS/APPROVALS

GEWISS S.p.A. Via Domenico Bosatelli 1
24069 Cenate Sotto - Bergamo - Italy
tel. +39 035 94 61 11 fax +39 035 94 69 09

www.gewiss.com
sat@gewiss.com
Last update 12/10/2024

Data, measures, designs and pictures are shown only as informative purposes, and could be changed without previous notice