Product Data Sheet

GW42231

42 RV Range

Watertight flush-mounting enclosures for emergencies and special applications with rail DIN. Available in red RAL 3000 or grey RAL7035 colours. Thanks to the emergency hammer, available as an acessory, sealable mask and halogen free materials are ideally suited for applications in areas open to public.

Rated current (A)	125	Insulation class	II
Colour	Red RAL 3000	Outer dim. LxHxD (mm)	145x200x70
IP degree	IP55	Installation	Flush mounting enclosures
Material	Technopolymer	Mechanical resistance	IK08
Rated voltage (V)	400	Glow Wire Test	650 °C
Operating temperature	-15 ÷ +60°C	Type of material	Halogen-free in compliance with EN 60754-2
Electrocod	0321	Thermo-pressure with ball	70 °C
Standard	EN 60670-1 (CEI 23-48) IEC60670-24 CEI 23-49	Insulation voltage	750 V
Dispersible power (W)	12	No. of modules EN 50022	4

BEHAVIOUR WITH CHEMICAL AND ATMOSPHERIC AGENTS

Saline solution	Acids		Bases		Solvents				Mineral oil	UV rays
	Concentrated	Diluited	Concentrated	Diluited	Hexane	Benzol	Acetone	Ethyl alcohol		
Resistant	Not resistant	Resistant	Resistant	Resistant	Limited resistance	Not resistant	Not resistant	Limited resistance	Limited resistance	Limited resistance

DIMENSIONAL

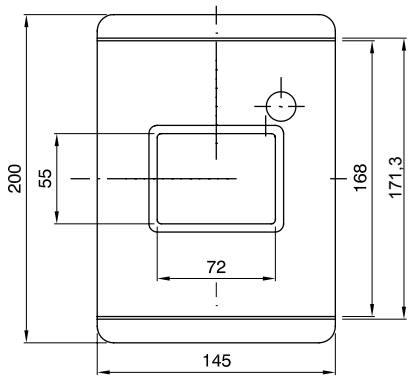

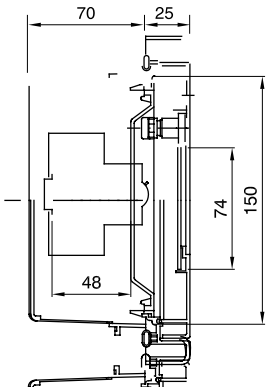

TECHNICAL SYMBOLOGY

II | IP55 | IK08 | 650 °C | -15 ÷ +60°C | Halogen-free in compliance with EN 60754-2 | 70 °C

STANDARDS/APPROVALS

CE

GEWISS S.p.A. Via Domenico Bosatelli 1
24069 Cenate Sotto - Bergamo - Italy
tel. +39 035 94 61 11 fax +39 035 94 69 09

www.gewiss.com
sat@gewiss.com
Last update 12/10/2024

Data, measures, designs and pictures are shown only as informative purposes, and could be changed without previous notice