Product Data Sheet

GW40115

40 CDE

German standard wall mounting enclosure equipped with bipolar terminal blocks and two interchangeable flanges (2 flanges with knock-out elements).

Insulation class	II	Colour	Grey RAL 7035
Outer dim. LxHxD (mm)	298x570x140	IP degree	IP65
Installation	Wall mounting	Mechanical resistance	IK07
Door colour	Smoked Transparent	Terminal block N (mm²)	(6x25)+(20x10)
Terminal block T (mm²)	(6x25)+(20x10)	No. of modules EN 50022	36 (12x3)
Glow Wire Test	750 °C	Standard	IEC EN 60670-1; IEC EN 60670-24; DIN VDE 0603-1
Operating temperature	-25 +60 °C	Electrocod	0321
Thermo-pressure with ball	70 °C	Pole 1 (mm²)	N (6x35)+(20x10)
Pole 2 (mm²)	E (6x35)+(20x10)		

BEHAVIOUR WITH CHEMICAL AND ATMOSPHERIC AGENTS

Saline solution	Acids		Bases		Solvents				Mineral oil	UV rays
	Concentrated	Diluited	Concentrated	Diluited	Hexane	Benzol	Acetone	Ethyl alcohol		
Resistant	Not resistant	Limited resistance	Limited resistance	Not resistant	Limited resistance	Not resistant	Not resistant	Limited resistance	Limited resistance	Resistant

DIMENSIONAL

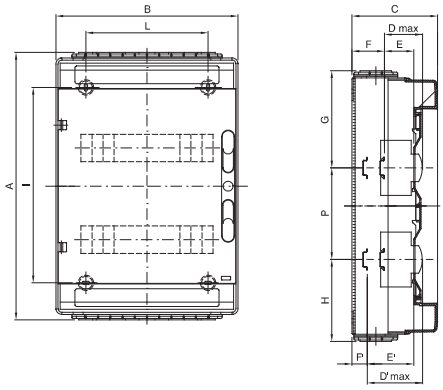

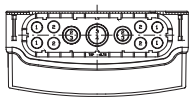

1	2	3	4
M16	M20	M25	M32

	Codice	A	B	C	B	E	F	G	H	P	D'max	E'	F'	NR	I	L
12M	GW 40 113 GW 40 123	278	298	140	75	48	48	126,5	151,5	/	102	75	21	4	161	200
24M	GW 40 114 GW 40 124	438						156,5	131,5	150					320	
36M	GW 40 115 GW 40 125	588						156,5	131,5	150					494	

TECHNICAL SYMBOLOGY

II	IP65	IK07	750 °C	-25 +60 °C	70 °C

STANDARDS/APPROVALS

GEWISS S.p.A. Via Domenico Bosatelli 1
24069 Cenate Sotto - Bergamo - Italy
tel. +39 035 94 61 11 fax +39 035 94 69 09

www.gewiss.com
sat@gewiss.com

Last update 12/10/2024

Data, measures, designs and pictures are shown only as informative purposes, and could be changed without previous notice