Product Data Sheet

GW46564

46 Range

Accessories and complementary items for distribution and automation boards range 46.

Colour	Grey RAL 7035	For boards LxH (mm)	310x425
Suitable for	46QP - 46QM - 46QX	Electrocod	0303
Hinge material	Metal		

DIMENSIONAL

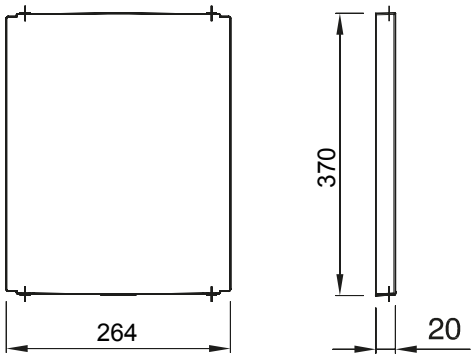

GEWISS S.p.A. Via Domenico Bosatelli 1
24069 Cenate Sotto - Bergamo - Italy
tel. +39 035 94 61 11 fax +39 035 94 69 09

www.gewiss.com
sat@gewiss.com
Last update 12/10/2024

Data, measures, designs and pictures are shown only as informative purposes, and could be changed without previous notice