Product Data Sheet

GW44808

46 Range

Range of Watertight surface-mounting boards made in thermoplastic material GW PLAST 120. In compliance with IEC 61439-1 (CEI 17/113), IEC 61439-2 (CEI 17/114), IEC 60670-1 (CEI 23/48) e IEC 60670-24 (CEI 23/49). Available in 4 sizes, transparent and black door versions with IP55 protection degree. Accessories available: panels with window complete with extrable frames, for modular devices and moulded-case circuit breakers up to 160A. Indicated for automation and distribution.

Insulation class	II	Colour	Grey RAL 7035
Outer dim. LxHxD (mm)	200x254x135	IP degree	IP55
Material	Technopolymer GWPLAST 120	Mechanical resistance	IK08
No. locks	1	Dispersible power A (W)	16
Dispersible power B (W)	17	Glow Wire Test	650 °C
Operating temperature	-25 +60 °C	Insulation voltage (Ui)	750 V
Type of material	Halogen-free in compliance with EN 60754-2	Electrocod	1312
Thermo-pressure with ball	110 °C	Accessories for insulation restoring	GW44621-GW46446-GW46451
Standard	EN 61439-1, EN 61439-2, EN60670-1, IEC 60670-24	Family	44 CEP
Maximum rated insulation voltage (Ui)	750 V	Type of door	Blank door

BEHAVIOUR WITH CHEMICAL AND ATMOSPHERIC AGENTS

Saline solution	Acids		Bases		Solvents				Mineral oil	UV rays
	Concentrated	Diluited	Concentrated	Diluited	Hexane	Benzol	Acetone	Ethyl alcohol		
Resistant	Limited resistance	Limited resistance	Limited resistance	Limited resistance	Limited resistance	Not resistant	Not resistant	Limited resistance	Limited resistance	Limited resistance

DIMENSIONAL

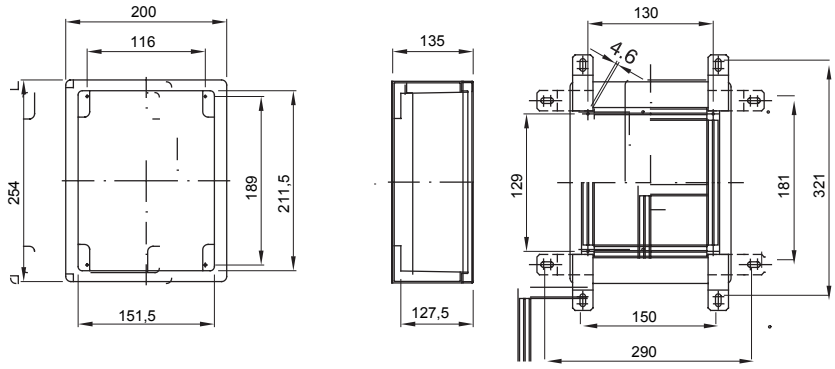

TECHNICAL SYMBOLOGY

II | IP55 | IK08 | 650 °C | -25 +60 °C | Halogen-free in compliance with EN 60754-2 | 110 °C

STANDARDS/APPROVALS

GEWISS S.p.A. Via Domenico Bosatelli 1
24069 Cenate Sotto - Bergamo - Italy
tel. +39 035 94 61 11 fax +39 035 94 69 09

www.gewiss.com
sat@gewiss.com
Last update 29/04/2024

Data, measures, designs and pictures are shown only as informative purposes, and could be changed without previous notice