Product Data Sheet

GW70493NM

70 RT HP Range

70 RT HP is a complete offer of rotary isolator switches from 16 A to 160 A, available in boxes both in insulating material and metal, in control or emergency versions, compatible with the main applications for residential, tertiary and industrial contexts.
DC versions for photovoltaic applications are also available from 16 A to 40 A in insulating box.
The series is completed with versions for board from 16 A to 1000 A and for DIN rail fixing from 16 A to 63 A, which can be equipped with auxiliary contacts.
The devices have been designed to reduce wiring time, facilitate installation and guarantee the maximum safety and robustness even in the most demanding conditions.

Circuit breaker	Rotary isolator	Version	Box
Material	Metal	Type	For emergency
Rated current (A)	125	No. of poles	3P+N
Knob colour	Red	Lockable	YES (max. 3 locks in OFF)
IP degree	IP66	Mechanical resistance	IK10 (box); IK08 (knob)
Ambient temperature	-25 +60 °C	Lid screws (no. and type)	4 metal screws
Current in AC21A (415V)	125	Current in AC22A (415V)	125
Type of accessory	Max. 4 auxiliary contacts (2 per side)	Current in AC23A (415V)	125
Cable section	4-70 mm²		

BEHAVIOUR WITH CHEMICAL AND ATMOSPHERIC AGENTS

Saline solution	Acids		Bases		Solvents				Mineral oil	UV rays
	Concentrated	Diluited	Concentrated	Diluited	Hexane	Benzol	Acetone	Ethyl alcohol		
Resistant	Limited resistance	Limited resistance	Limited resistance	Limited resistance	Resistant	Resistant	Resistant	Resistant	Resistant	Resistant

DIMENSIONAL

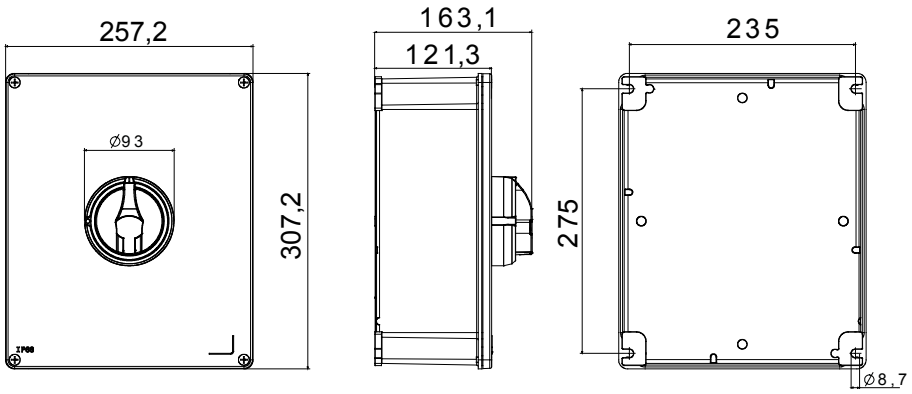

TECHNICAL SYMBOLOGY

IP	IK
IP66	IK10 (box); IK08 (knob)

STANDARDS/APPROVALS

CE

GEWISS S.p.A. Via Domenico Bosatelli 1
24069 Cenate Sotto - Bergamo - Italy
tel. +39 035 94 61 11 fax +39 035 94 69 09

www.gewiss.com
sat@gewiss.com
Last update 30/04/2024

Data, measures, designs and pictures are shown only as informative purposes, and could be changed without previous notice