Product Data Sheet

GW70006

70 RT HP Range

70 RT HP is a complete offer of rotary isolator switches from 16 A to 160 A, available in boxes both in insulating material and metal, in control or emergency versions, compatible with the main applications for residential, tertiary and industrial contexts.
DC versions for photovoltaic applications are also available from 16 A to 40 A in insulating box.
The series is completed with versions for board from 16 A to 1000 A and for DIN rail fixing from 16 A to 63 A, which can be equipped with auxiliary contacts.
The devices have been designed to reduce wiring time, facilitate installation and guarantee the maximum safety and robustness even in the most demanding conditions.

Circuit breaker	Rotary isolator	Version	For board
Rated current (A)	32	No. of poles	4P
Regulation field	87 - 145 mm	No. of modules EN 50022	4
Current in AC21A (415V)	32	Knob colour	Red
Current in AC22A (415V)	32	Lockable	YES (max. 3 locks in OFF)
Current in AC23A (415V)	32	Cable section	1-10 mm²
Power dissipation per pole	0,97 W/pole		

DIMENSIONAL

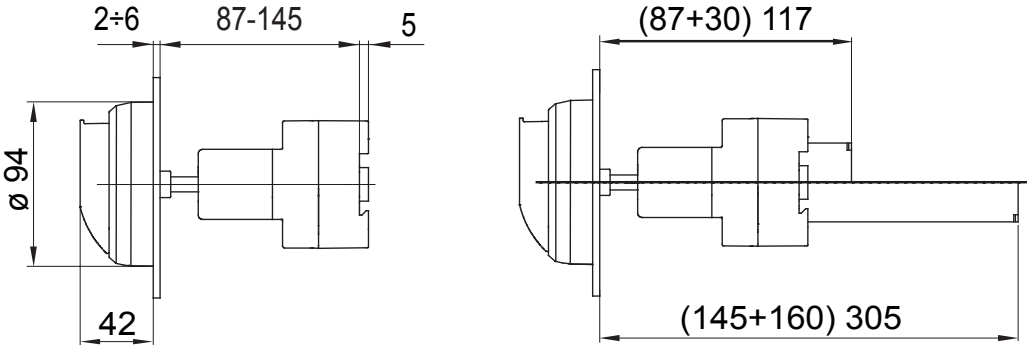

STANDARDS/APPROVALS

GEWISS S.p.A. Via Domenico Bosatelli 1
24069 Cenate Sotto - Bergamo - Italy
tel. +39 035 94 61 11 fax +39 035 94 69 09

www.gewiss.com
sat@gewiss.com
Last update 28/04/2024

Data, measures, designs and pictures are shown only as informative purposes, and could be changed without previous notice