Product Data Sheet

GW66434

IB Range

Compact industrial socket-outlets complying with the IEC 60309 Standard (EN 60309-1 EN 60309-4), with more simple and intuitive longitudinal operation of the mechanical interlock. The control switch allows the plug to be connected and disconnected only in the open position, and the switch to close only with the plug inserted. The range of socket-outlets with interlock switch is combined with a complete range of accessories for individual or group surface-mounting, and for flushmounting (also possible on 3 gang rectangular boxes).

Type	Compact	Thermo-pressure with ball	125 °C
IP degree	IP44	No. of poles	2P+E
Mechanical resistance	IK08	Frequency	50/60 Hz
Operating temperature	-25 +40 °C	Protection	NO (SBF)
With back-mounting box	No	Electrocod	2220
Glow wire test	850 °C (active parts) - 650 °C (passive parts)	Colour	Yellow
Rated current (A)	32	Reference h	4
Rated voltage	100-130 V		

BEHAVIOUR WITH CHEMICAL AND ATMOSPHERIC AGENTS

Saline solution	Acids		Bases		Solvents				Mineral oil	UV rays
	Concentrated	Diluited	Concentrated	Diluited	Hexane	Benzol	Acetone	Alcohol		
Limited resistance	Not resistant	Limited resistance	Limited resistance	Resistant	Resistant	Resistant	Resistant	Resistant	Resistant	Resistant

DIMENSIONAL

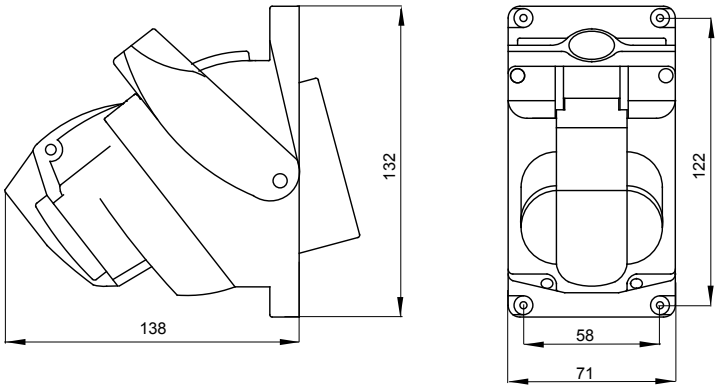

TECHNICAL SYMBOLOGY

125 °C

IP

IP44

IK

IK08

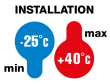

-25 +40 °C

GWT

850 °C (active parts) - 650 °C (passive parts)

STANDARDS/APPROVALS

Reach Declaration

CE

EN 03

GEWISS S.p.A. Via Domenico Bosatelli 1
24069 Cenate Sotto - Bergamo - Italy
tel. +39 035 94 61 11 fax +39 035 94 69 09

www.gewiss.com
sat@gewiss.com
Last update 12/10/2024

Data, measures, designs and pictures are shown only as informative purposes, and could be changed without previous notice